FARMHOUSE 90 X DOUBLE-BOWL SINK RECTANGLE

PRODUCT INFORMATION

Article title	Villeroy & Boch Farmhouse 90 X Double-bowl sink, included Waste system hand-operated, of Ceramic, 900 x 550 mm, White Alpin CeramicPlus
Article number	639001R1
Assembly / Assembly type	surface-mounted installation
Assembly instructions	minimum unit width: 90 cm, The rear is unglazed and the projection is 50 cm. Overhang varies depending on the furniture manufacturer.|installation in natural stone / artificial stone countertops recommended
Scope of delivery	1 x sink , 1 x basket strainer waste
Length in mm	550
Width in mm	900
Height in mm	220
Interior depth	200
Collection	Farmhouse 90 X
Material	Ceramic
Colour name	White Alpin CeramicPlus
Other material	Grate: Stainless steel Valve: Stainless steel
Function of the drain fitting	basket strainer waste
Colour designation	White Alpin
Other colour designations	Grate: Chrome, Valve: Chrome

TECHNICAL DRAWINGS

639001R1

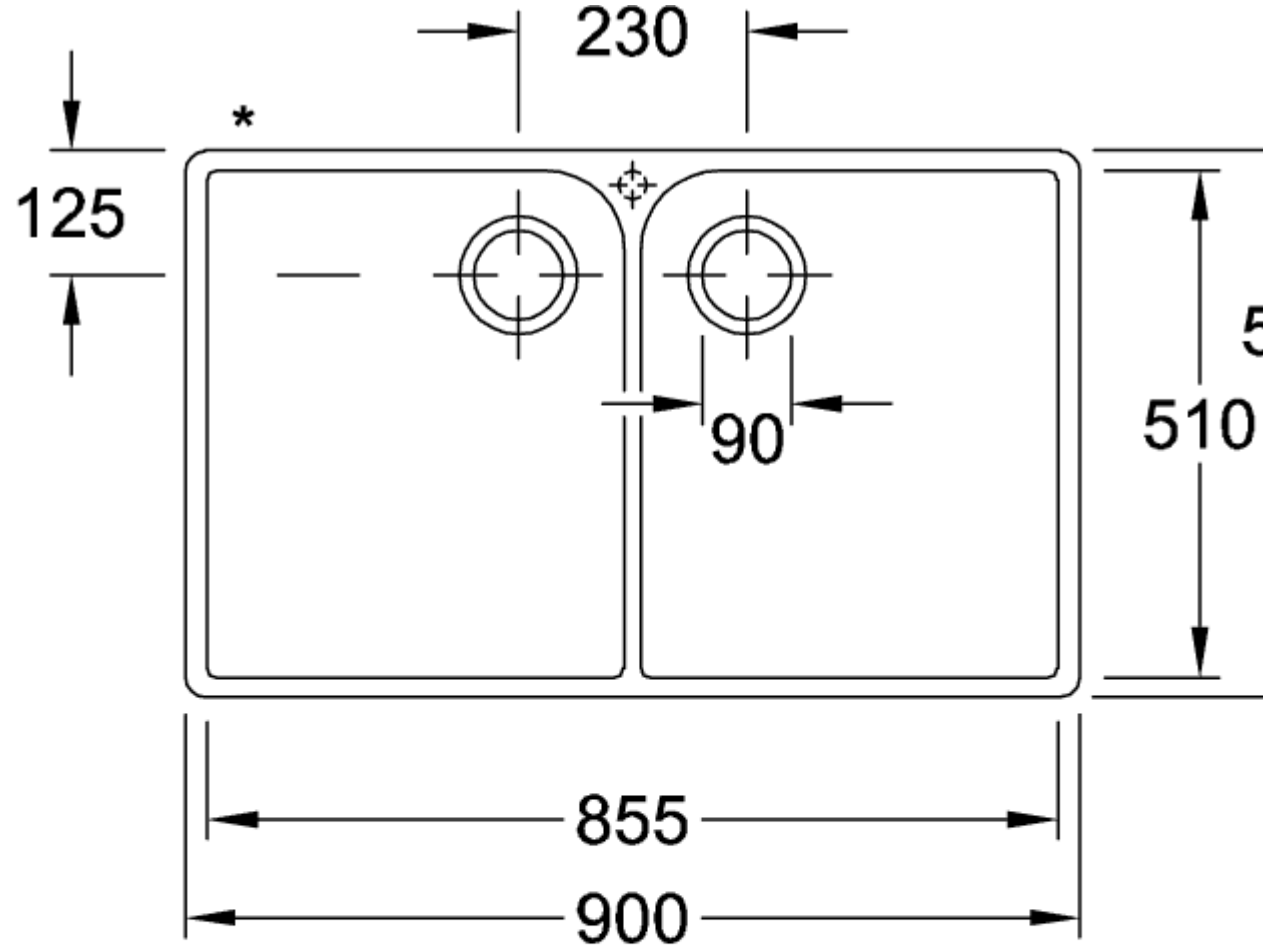

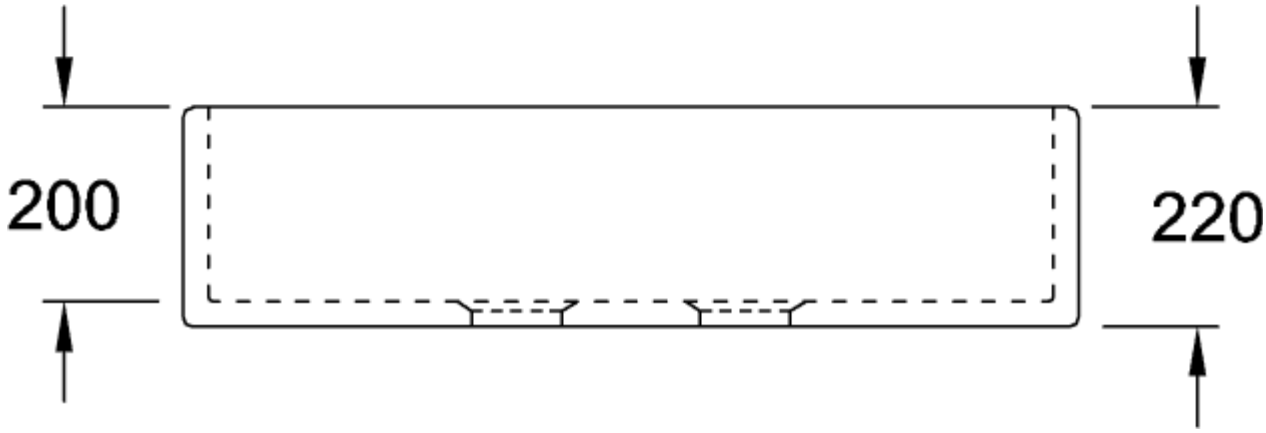
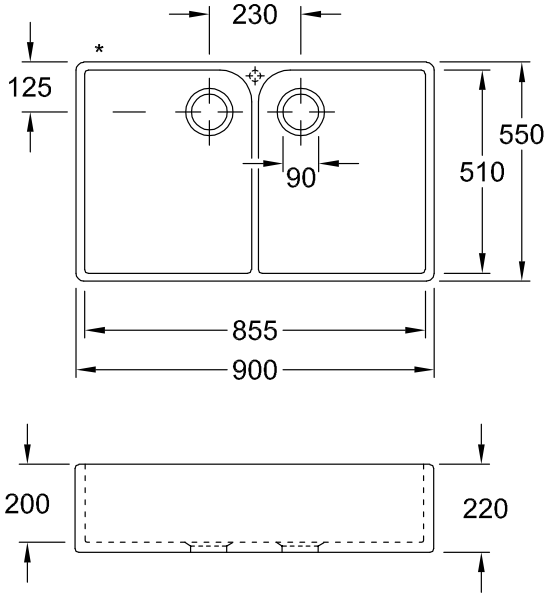
639001R1