FARMHOUSE 60 X SINGLE-BOWL SINK RECTANGLE

PRODUCT INFORMATION

Article title	Villeroy & Boch Farmhouse 60 X Single-bowl sink, included Waste system pop-up, of Ceramic, 595 x 500 mm, White Alpin CeramicPlus
Article number	636002R1
Assembly / Assembly type	surface-mounted installation
Assembly instructions	minimum unit width: 60 cm, The rear is unglazed and the projection is 50 cm. Overhang varies depending on the furniture manufacturer.|installation in natural stone / artificial stone countertops recommended
Scope of delivery	1 x sink , 1 x pop-up waste system 1 x cover cap, round
Length in mm	500
Width in mm	595
Height in mm	200
Interior depth	180
Collection	Farmhouse 60 X
Material	Ceramic
Colour name	White Alpin CeramicPlus
Other material	Grate: Stainless steel Valve: Stainless steel
Position of main bowl	Basin centred
Function of the drain fitting	pop-up waste system
Colour designation	White Alpin
Other colour designations	Grate: Chrome, Valve: Chrome

TECHNICAL DRAWINGS

636002R1

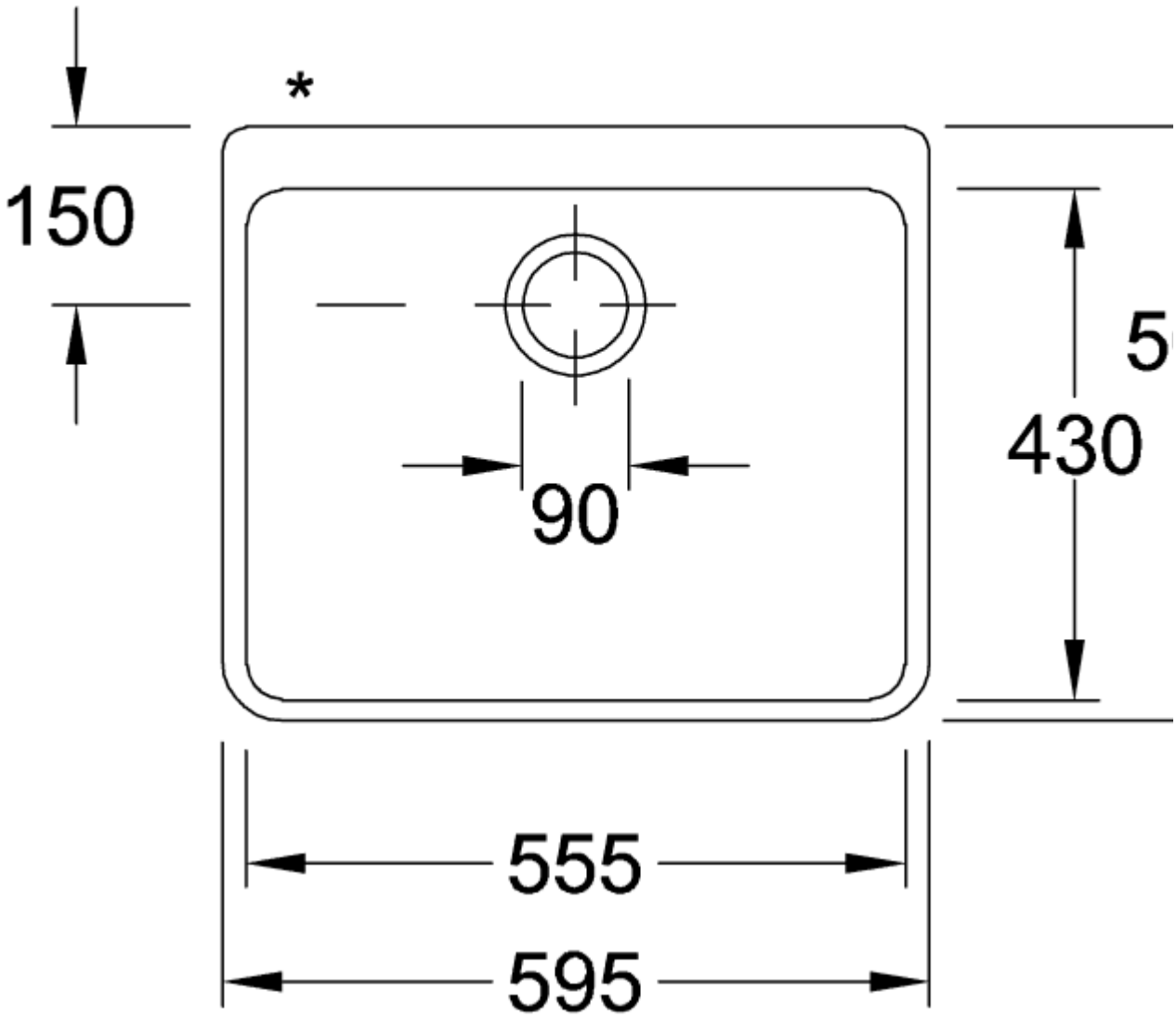
*
150
5
430
90
555
595

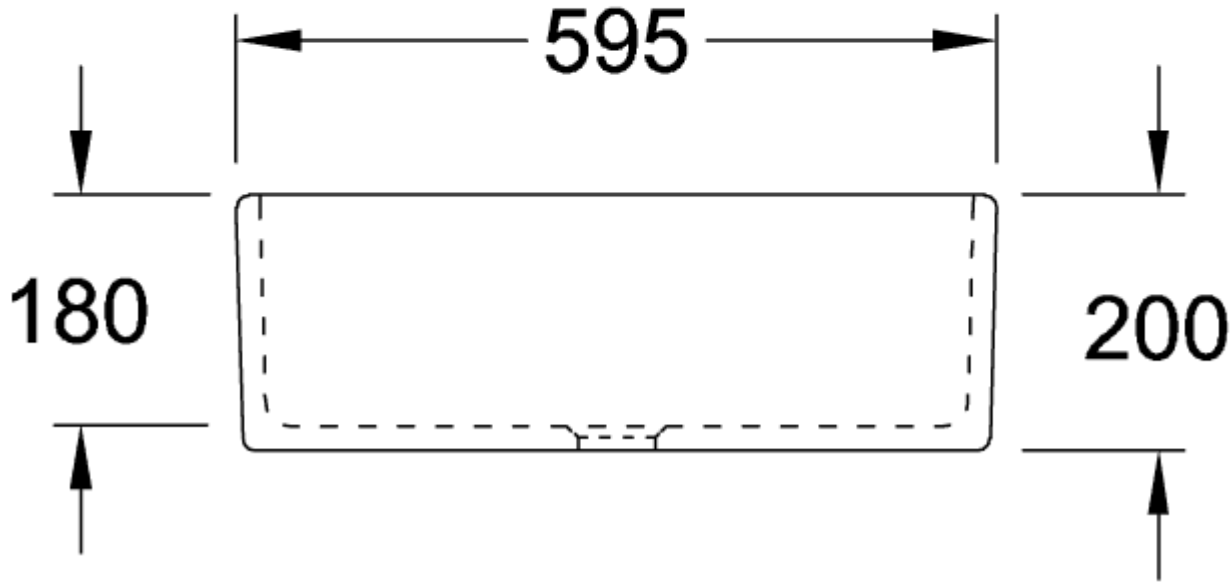
595
180
200
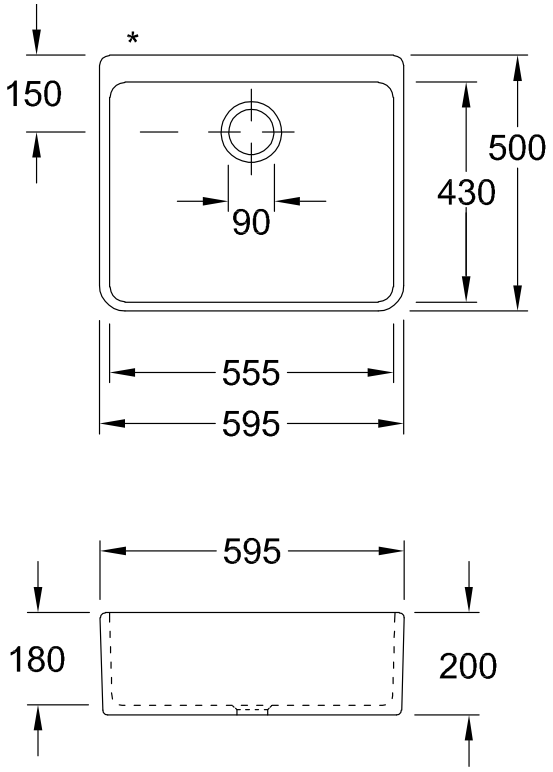
636002R1