SILUET 60 S FLAT FLUSH-MOUNTED SINK RECTANGLE

PRODUCT INFORMATION

Article title	Villeroy & Boch Siluet 60 S flat Flush-mounted sink, included Waste system hand-operated, of TitanCeram, 600 x 510 mm, White Alpin CeramicPlus
Article number	33461FR1
Assembly / Assembly type	flush-fitting installation
Assembly instructions	minimum unit width: 60 cm
Scope of delivery	1 x sink , 1 x basket strainer waste
Length in mm	510
Width in mm	600
Height in mm	220
Interior depth	200
Collection	Siluet 60 S flat
Material	TitanCeram
Colour name	White Alpin CeramicPlus
Other material	Grate: Stainless steel Valve: Stainless steel
Position of main bowl	Basin, reversible
Function of the drain fitting	basket strainer waste
Colour designation	White Alpin
Other colour designations	Grate: Chrome, Valve: Chrome

TECHNICAL DRAWINGS

33461FR1

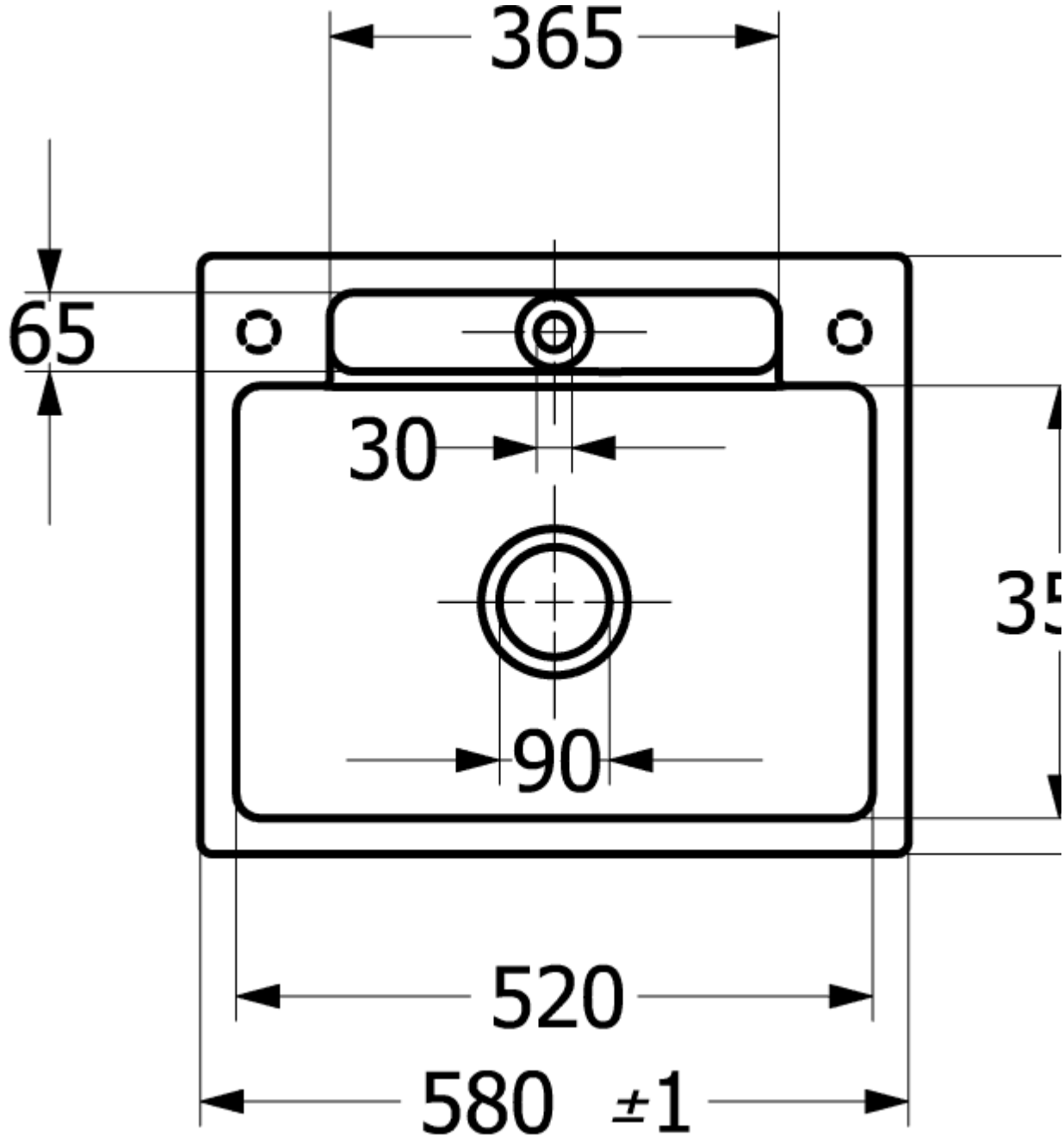

1
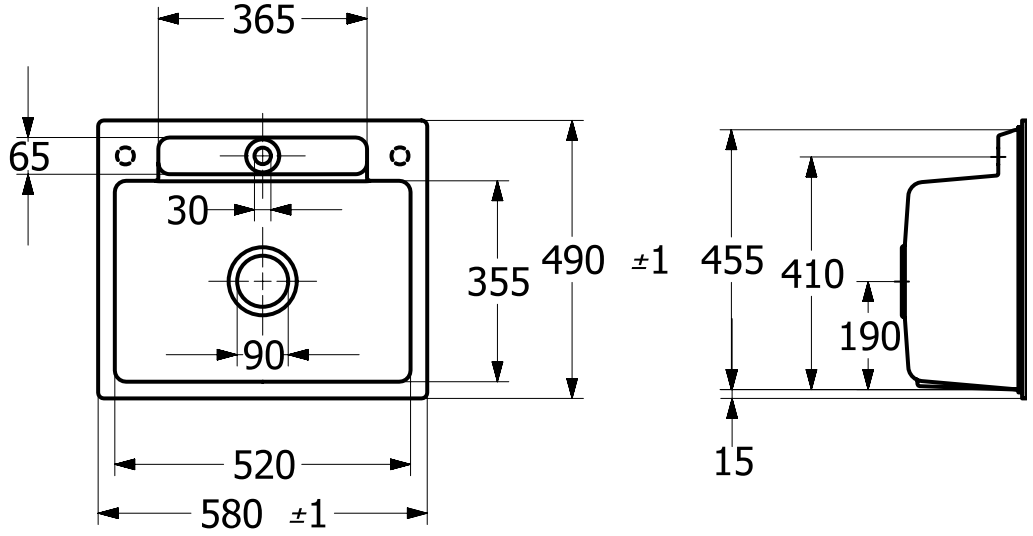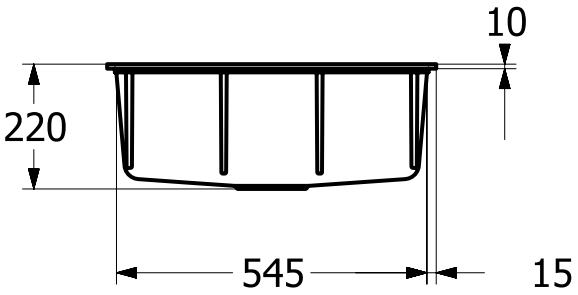
33461FR1