SILUET 45 FLAT FLUSH-MOUNTED SINK RECTANGLE

PRODUCT INFORMATION

Article title	Villeroy & Boch Siluet 45 flat Flush-mounted sink, included Waste system hand-operated, of TitanCeram, 780 x 490 mm, Stone White CeramicPlus
Article number	33341FRW
Assembly / Assembly type	flush-fitting installation
Assembly instructions	minimum unit width: 45 cm, Minimum thickness of the countertop when placed with a dishwasher: at least 3 cm|For flush-fit installation in natural stone or artificial stone countertops
Scope of delivery	1 x sink , 1 x basket strainer waste
Length in mm	490
Width in mm	780
Height in mm	220
Interior depth	200
Collection	Siluet 45 flat
Material	TitanCeram
Colour name	Stone White CeramicPlus
Other material	Grate: Stainless steel Valve: Stainless steel
Design Awards	KitchenInnovation of the Year® 2018
Position of main bowl	Basin, reversible
Function of the drain fitting	basket strainer waste
Colour designation	Stone White
Other colour designations	Grate: Chrome, Valve: Chrome

TECHNICAL DRAWINGS

33341FRW

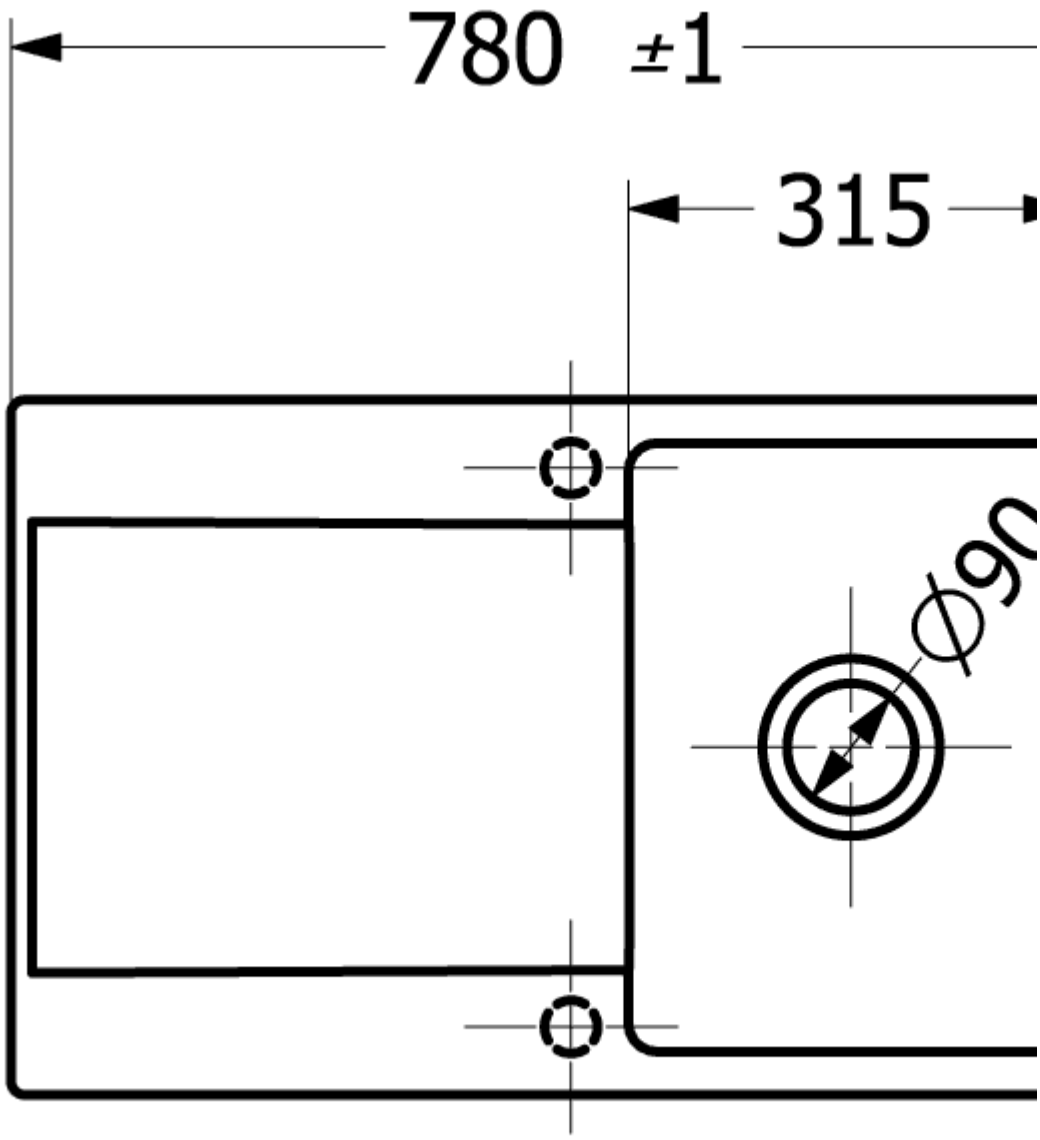
780 ±1
315
Ø9n

30
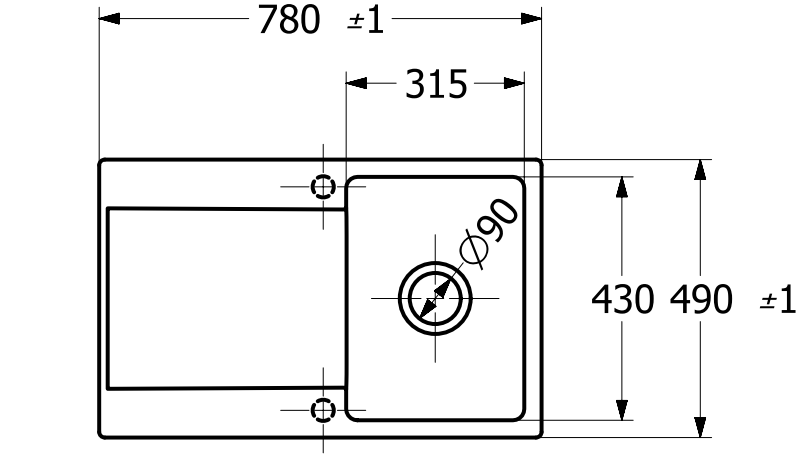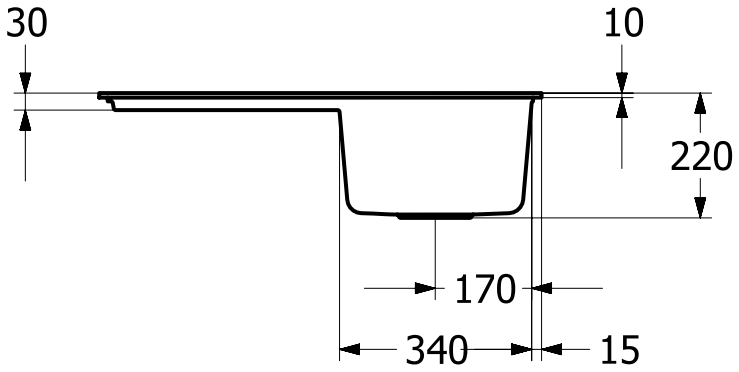
33341FRW