SUBWAY 45 XS BUILT-IN SINK RECTANGLE

PRODUCT INFORMATION

Article title	Villeroy & Boch Subway 45 XS Built-in sink, included Waste system hand-operated, of Ceramic, 475 x 510 mm, White Alpin CeramicPlus
Article number	678101R1
Assembly / Assembly type	surface-mounted installation
Assembly instructions	minimum unit width: 45 cm
Scope of delivery	1 x sink , 1 x basket strainer waste
Length in mm	510
Width in mm	475
Height in mm	225
Interior depth	205
Collection	Subway 45 XS
Material	Ceramic
Colour name	White Alpin CeramicPlus
Other material	Grate: Stainless steel Valve: Stainless steel
Position of main bowl	Basin centred
Function of the drain fitting	basket strainer waste
Colour designation	White Alpin
Other colour designations	Grate: Chrome, Valve: Chrome

TECHNICAL DRAWINGS

678101R1

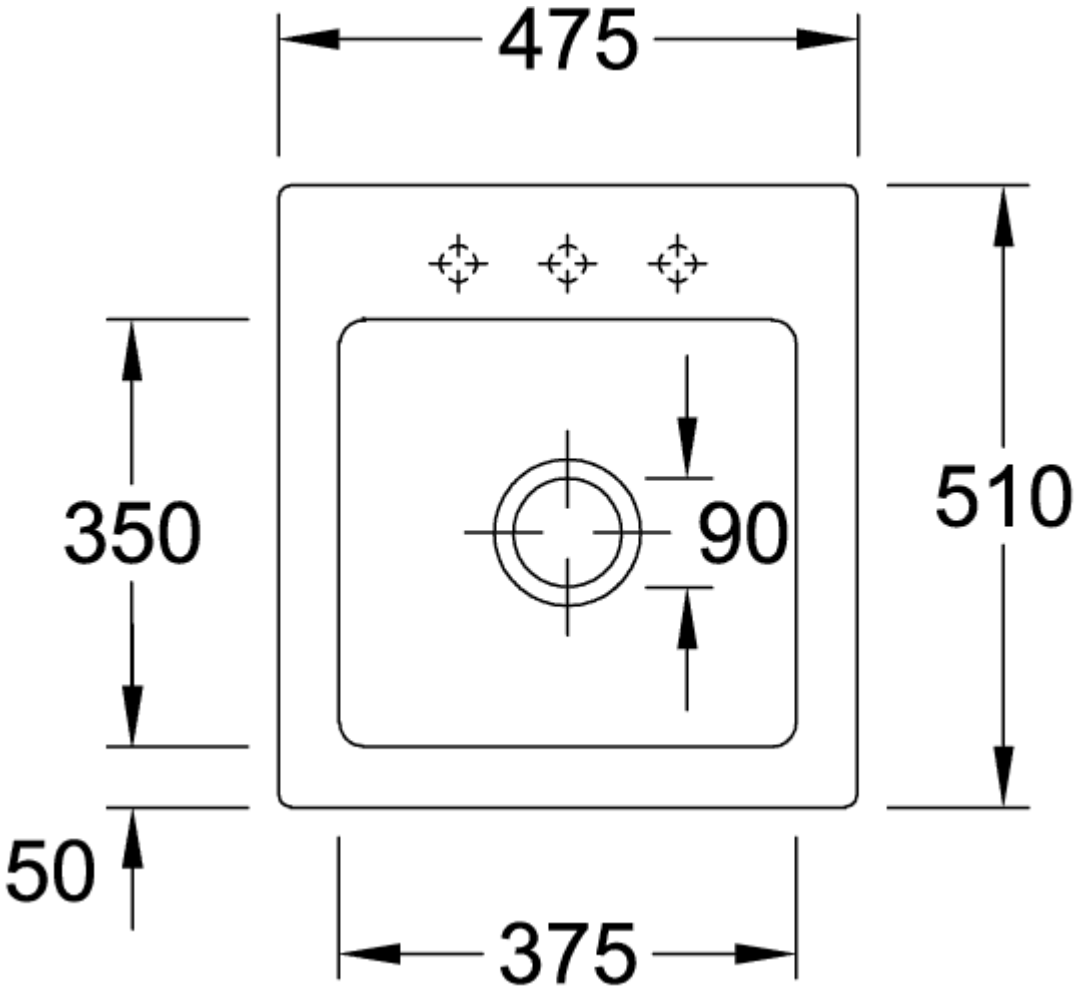
475
350
90
510
50
375

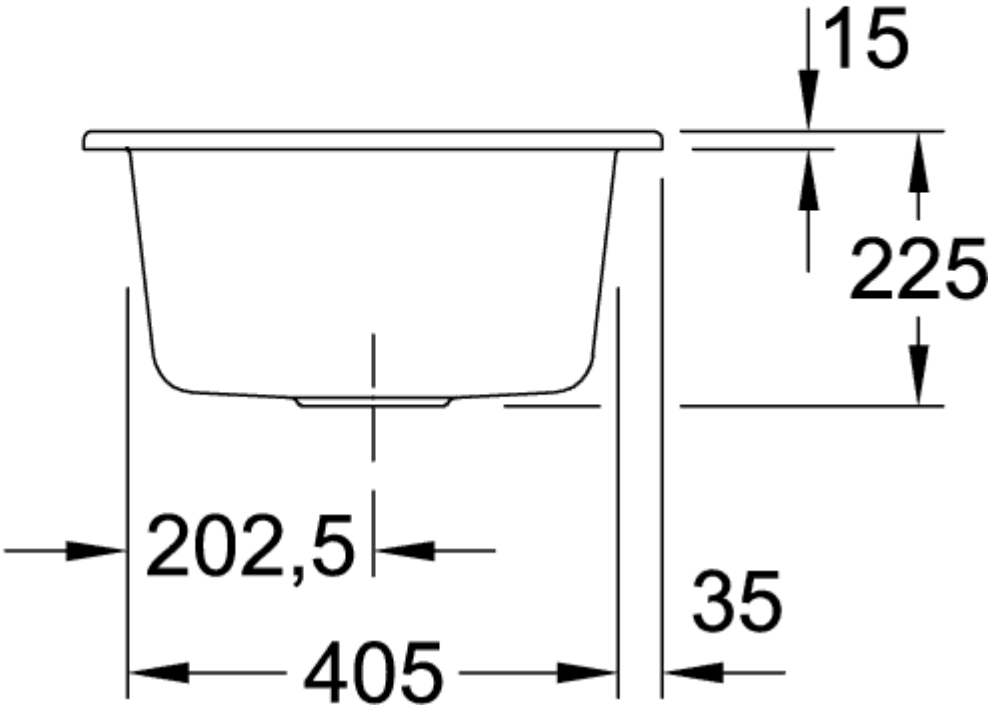
15
225
202,5
35
405
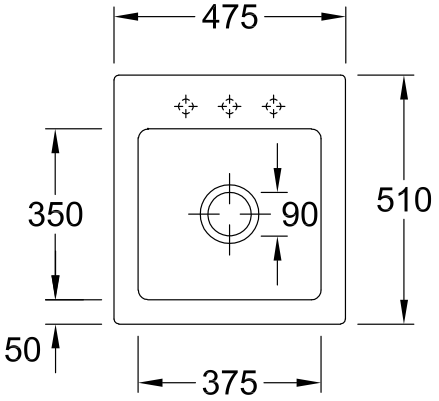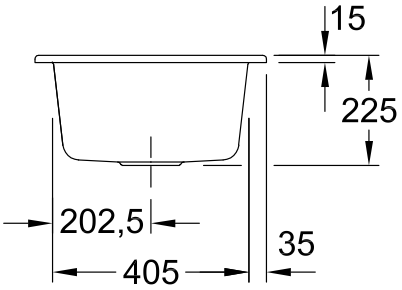
678101R1