SUBWAY 60 XR BUILT-IN SINK RECTANGLE

PRODUCT INFORMATION

Article title	Villeroy & Boch Subway 60 XR Built-in sink, included Waste system hand-operated
Article number	672101H9
Assembly / Assembly type	surface-mounted installation
Assembly instructions	minimum unit width: 60 cm
Scope of delivery	1 x sink , 1 x basket strainer waste
Interior depth	200
Collection	Subway 60 XR
Position of main bowl	Basin on right
Function of the drain fitting	basket strainer waste

TECHNICAL DRAWINGS

672101H9

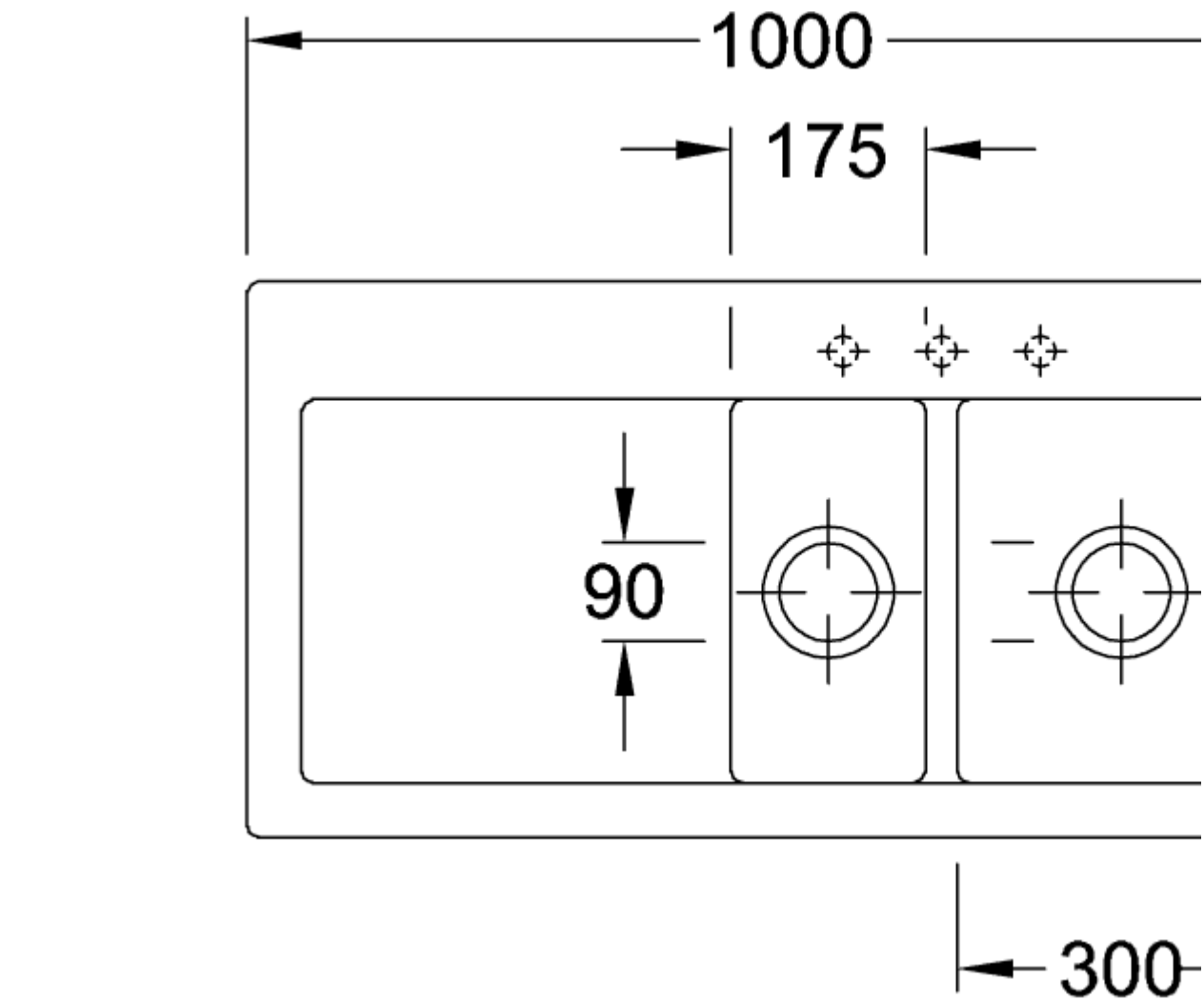
1000
175
90
300

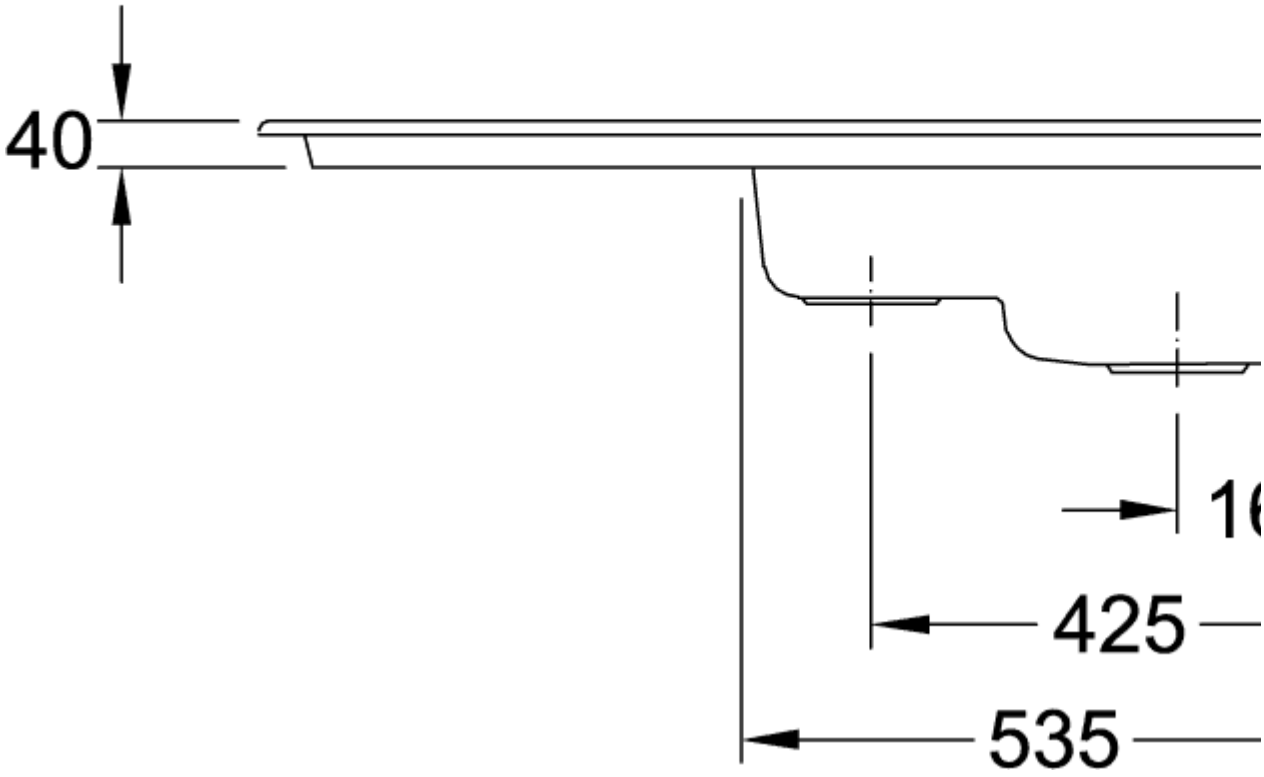
40
425
535
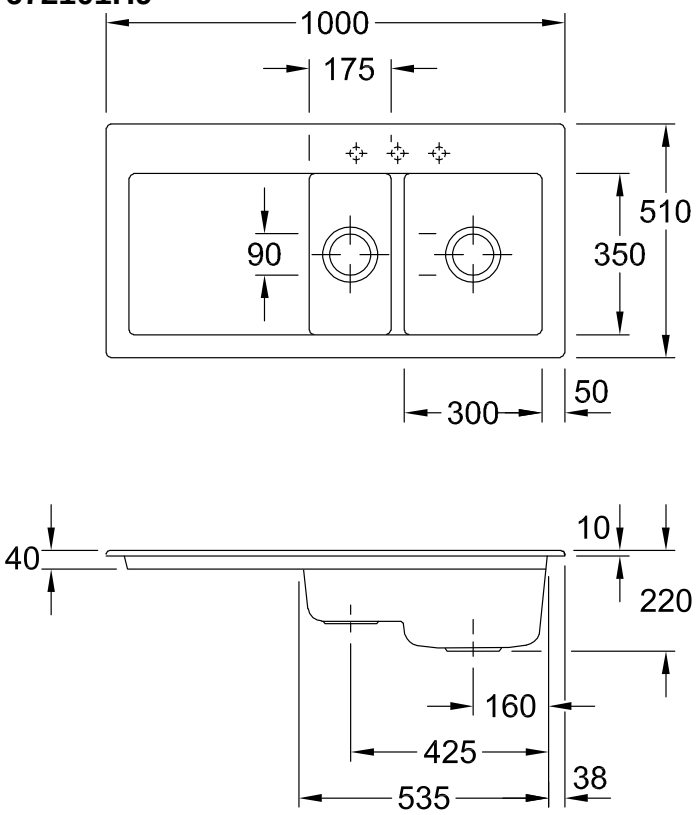
672101H9