SOLO CORNER CORNER SINK CORNER

PRODUCT INFORMATION

Article title	Villeroy & Boch Solo corner Corner sink, included Waste system hand-operated, Strainer bowl, Espresso glossy
Article number	670801KS
Assembly / Assembly type	Corner installation
Assembly instructions	Installation on a corner undersink cabinet with 90 cm side length.
Scope of delivery	1 x sink , 1 x basket strainer waste 1 x strainer bowl
Interior depth	185
Collection	Solo corner
Colour name	Espresso glossy
Position of main bowl	Basin centred
Function of the drain fitting	basket strainer waste

TECHNICAL DRAWINGS

670801KS

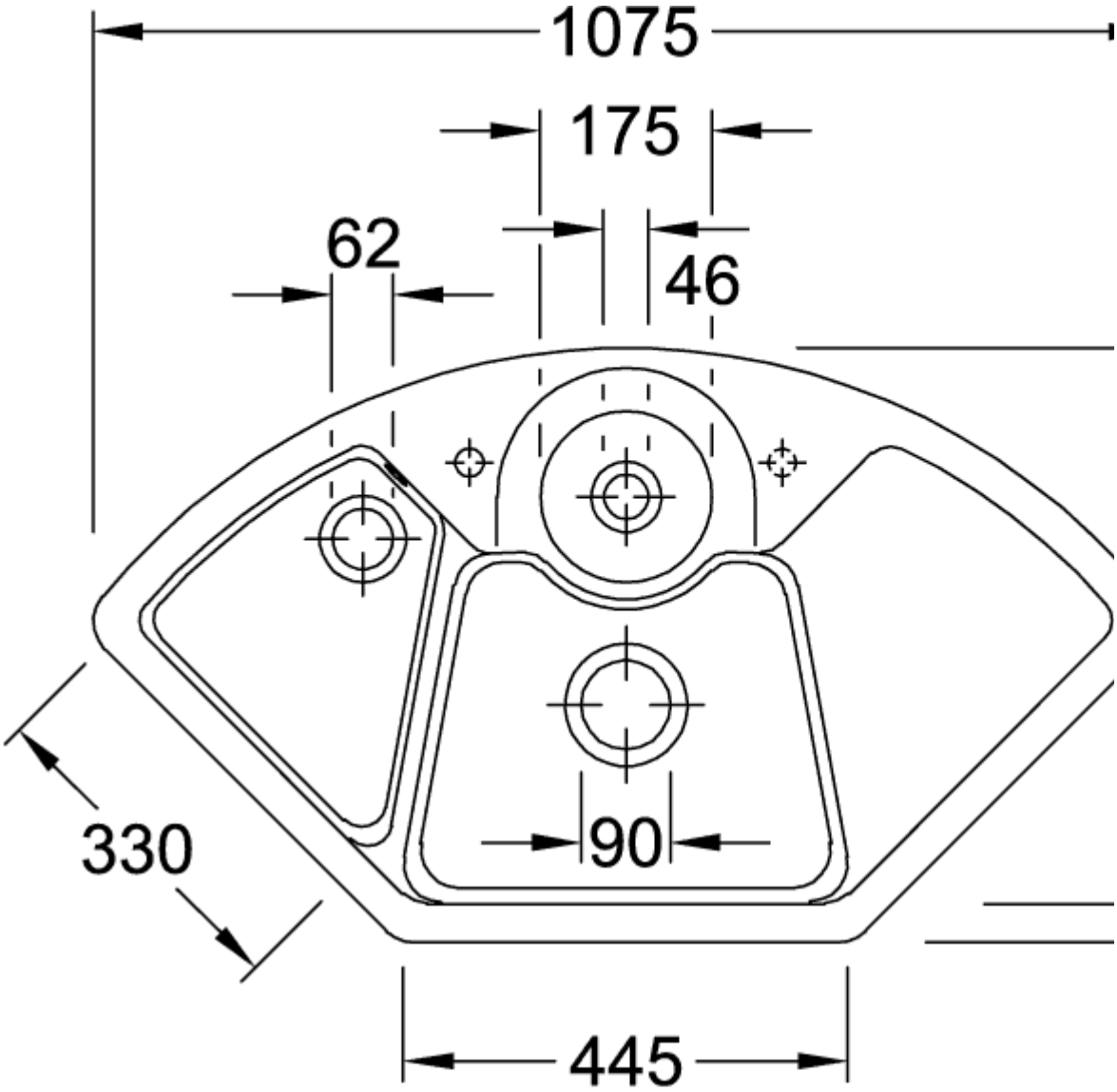
1075
175
62
46
330
90
445

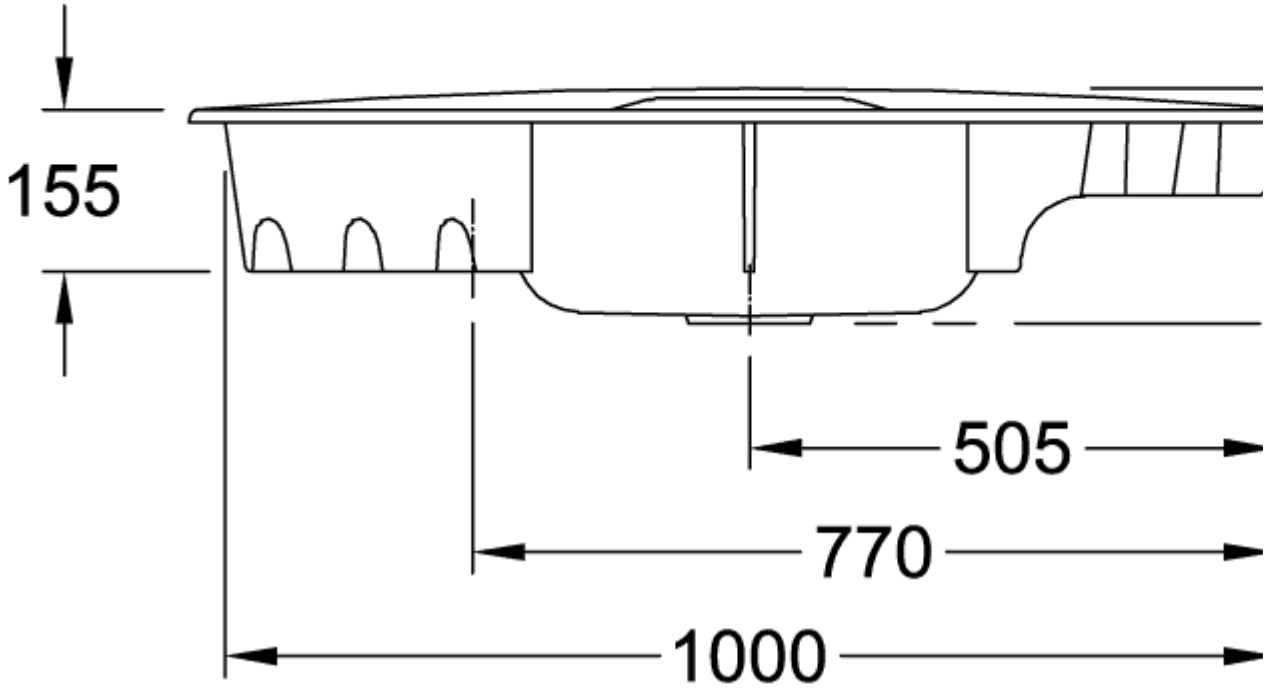
155
505
770
1000
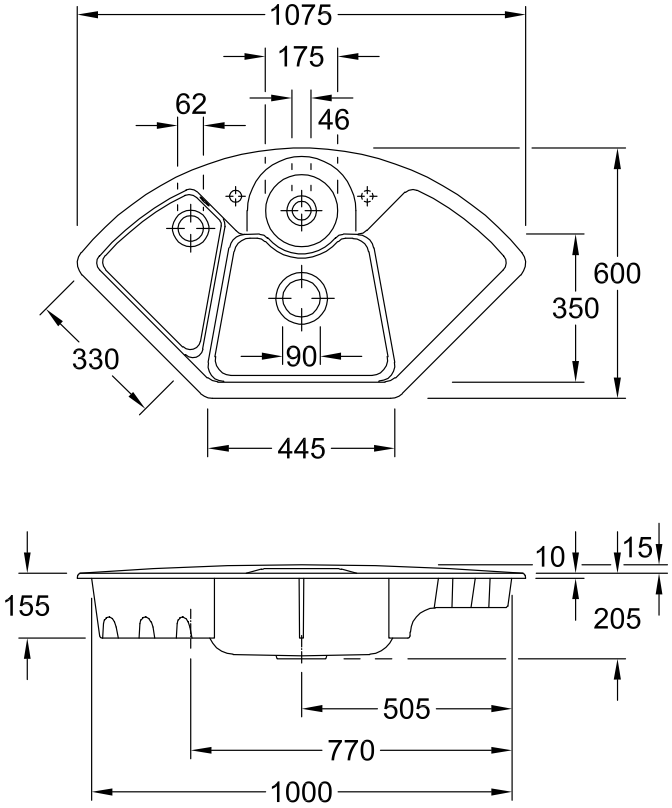
670801KS