FARMHOUSE 80 X DOUBLE-BOWL SINK RECTANGLE

PRODUCT INFORMATION

Article title	Villeroy & Boch Farmhouse 80 X Double-bowl sink, included Waste system hand-operated, of Ceramic, 795 x 500 mm, Stone White CeramicPlus
Article number	638001RW
Assembly / Assembly type	surface-mounted installation
Assembly instructions	minimum unit width: 80 cm, The rear is unglazed and the projection is 50 cm. Overhang varies depending on the furniture manufacturer.|installation in natural stone / artificial stone countertops recommended
Scope of delivery	1 x sink , 1 x basket strainer waste
Length in mm	500
Width in mm	795
Height in mm	220
Interior depth	200
Collection	Farmhouse 80 X
Material	Ceramic
Colour name	Stone White CeramicPlus
Other material	Grate: Stainless steel Valve: Stainless steel
Function of the drain fitting	basket strainer waste
Colour designation	Stone White
Other colour designations	Grate: Chrome, Valve: Chrome

TECHNICAL DRAWINGS

638001RW

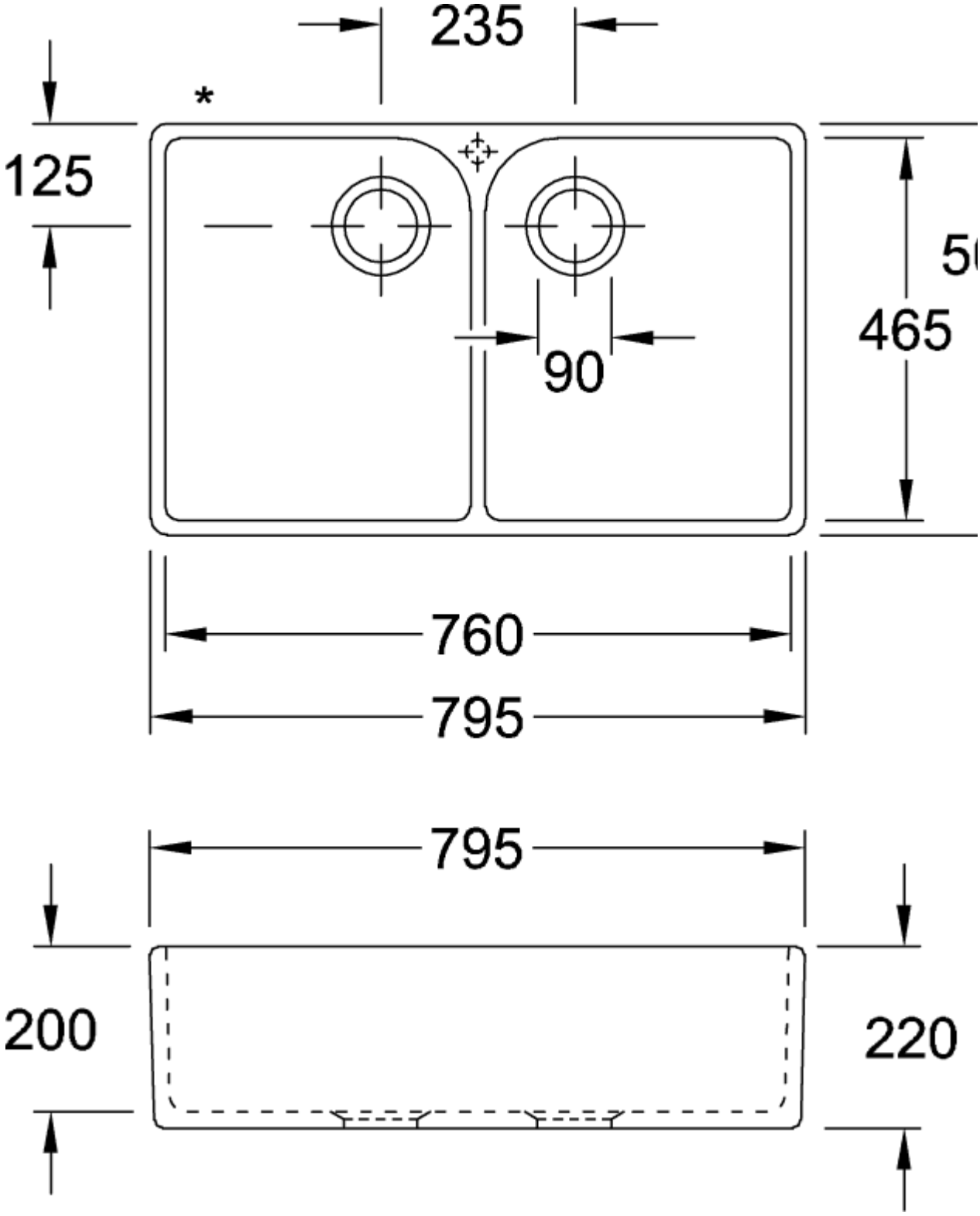
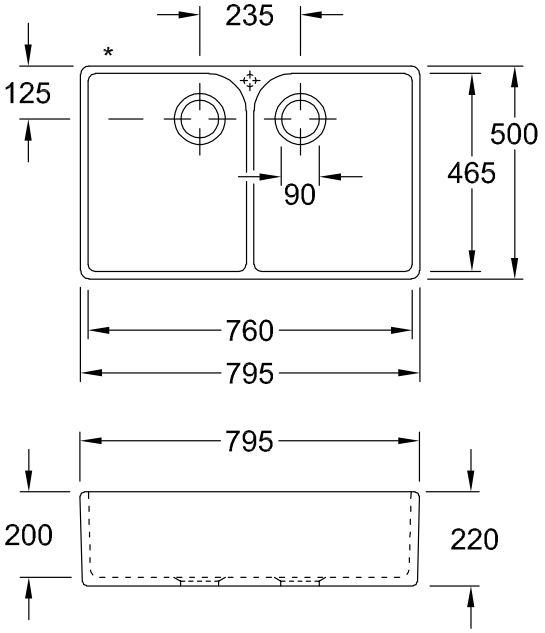
638001RW