SUBWAY 45 COMPACT BUILT-IN SINK RECTANGLE

PRODUCT INFORMATION

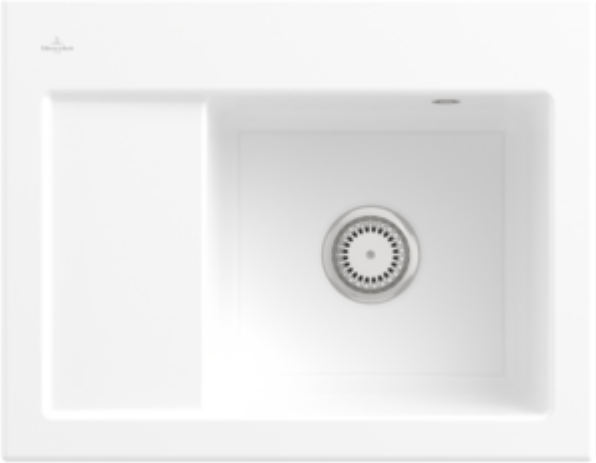

Article title	Villeroy & Boch Subway 45 Compact Built-in sink, included Waste system hand-operated, of Ceramic, 650 x 510 mm, White Alpin CeramicPlus
Article number	331301R1
Assembly / Assembly type	surface-mounted installation
Assembly instructions	minimum unit width: 45 cm
Scope of delivery	1 x sink , 1 x basket strainer waste
Length in mm	510
Width in mm	650
Height in mm	220
Interior depth	200
Collection	Subway 45 Compact
Material	Ceramic
Colour name	White Alpin CeramicPlus
Other material	Grate: Stainless steel Valve: Stainless steel
Position of main bowl	Basin on right
Function of the drain fitting	basket strainer waste
Colour designation	White Alpin
Other colour designations	Grate: Chrome, Valve: Chrome

TECHNICAL DRAWINGS

331301R1

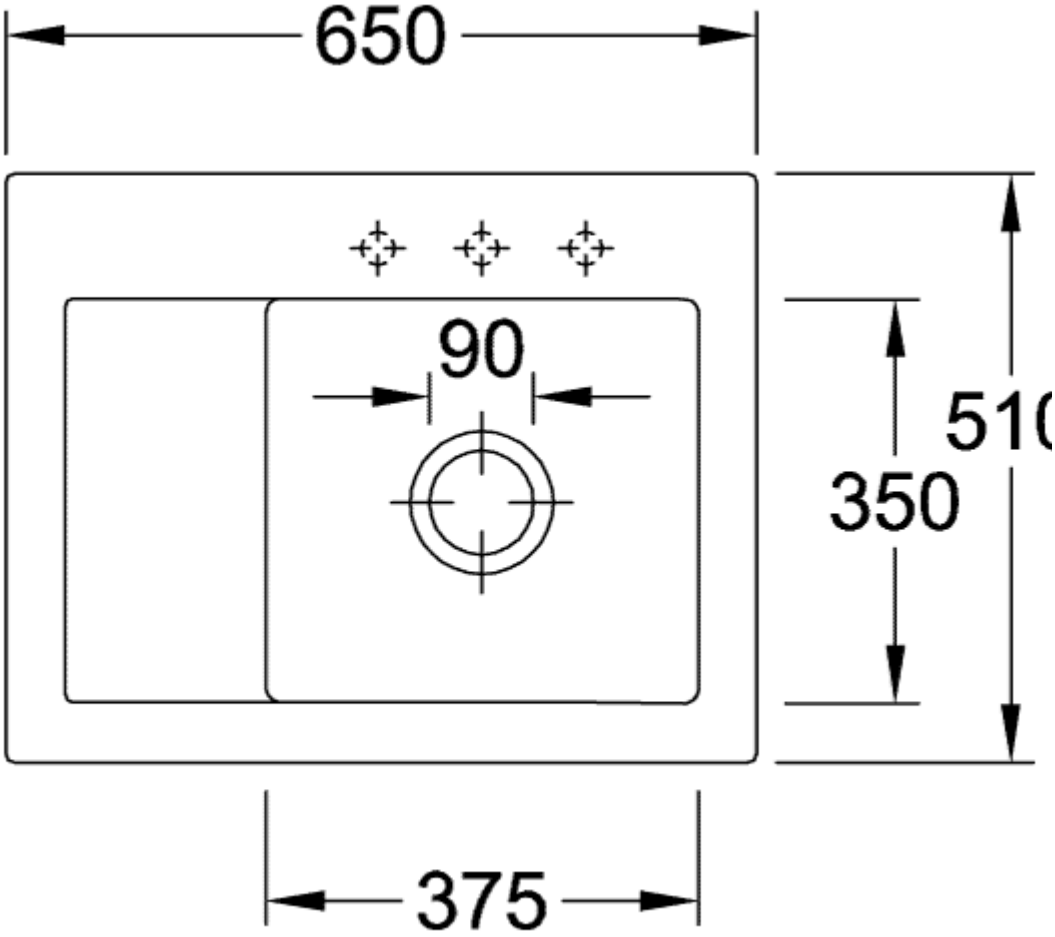
650
90
510
350
375

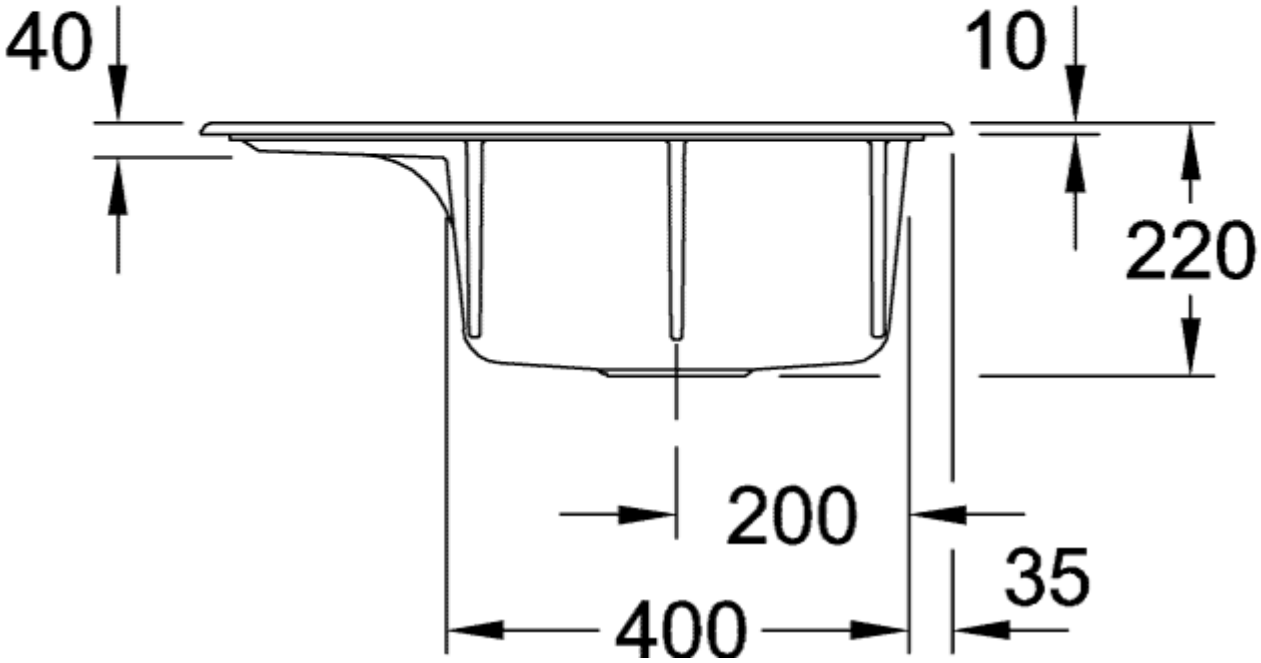
40
10
220
200
35
400
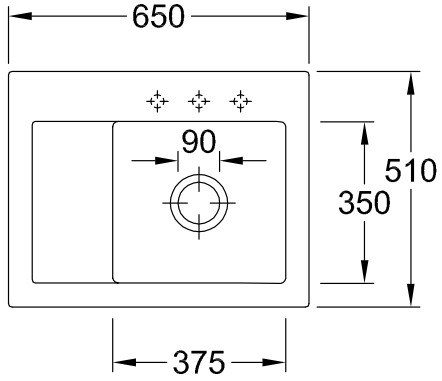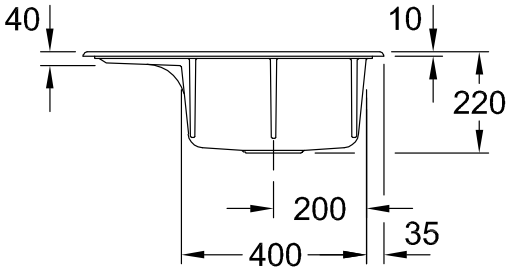
331301R1