# SQUARO INFINITY RECTANGULAR SHOWER TRAY RECTANGLE

## PRODUCT INFORMATION

| | |
|---|---|
| Article title | Villeroy & Boch Squaro Infinity Rectangular shower tray, 1600 x 700 x 40 mm, anthracite |
| Article number | UDQ1670SQI2BV-1S |
| Assembly / Assembly type | Surface-mounted, Corner installation, on left\|Corner installation, on right\|flush-fitting installation |
| Assembly instructions | Quaryl shower trays can be cut to size on site in accordance with the installation instructions; see pro.villeroy-boch for a detailed video. |
| Scope of delivery | 1 x rectangular shower tray , 1 x outlet cover in matching matt colour with chrome-plated strip |
| Length in mm | 1600 |
| Width in mm | 700 |
| Height in mm | 40 |
| Interior depth | 15 |
| Collection | Squaro Infinity |
| Material | Quaryl® |
| Colour name | anthracite |
| Other material | Outlet cover: Acrylic |
| Other surfaces | Outlet cover: matt |
| Design Awards | iF Product Design Award 2016 |
| Shape | Rectangle |
| Colour designation | anthracite |
| Other colour designations | Outlet cover: anthracite |
| Antibacterial surface (with AntiBac) | No |
| Easy surface cleaning (CeramicPlus) | No |
| With slip resistance | No |

## TECHNICAL DRAWINGS

### UDQ1670SQI2BV-1S

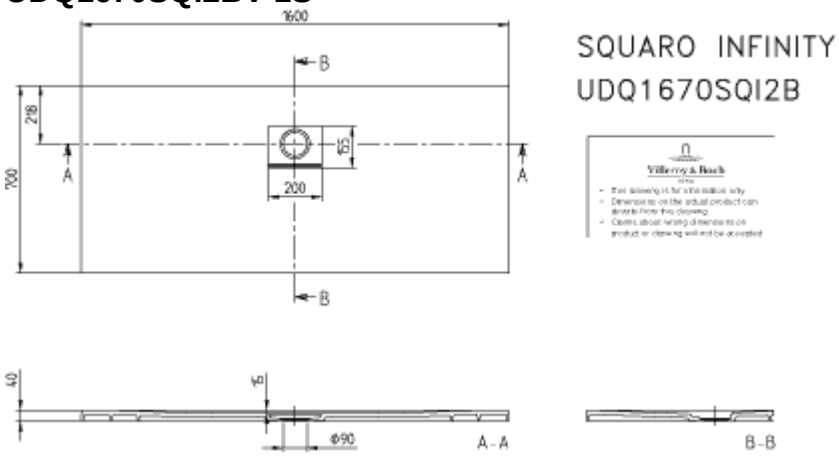

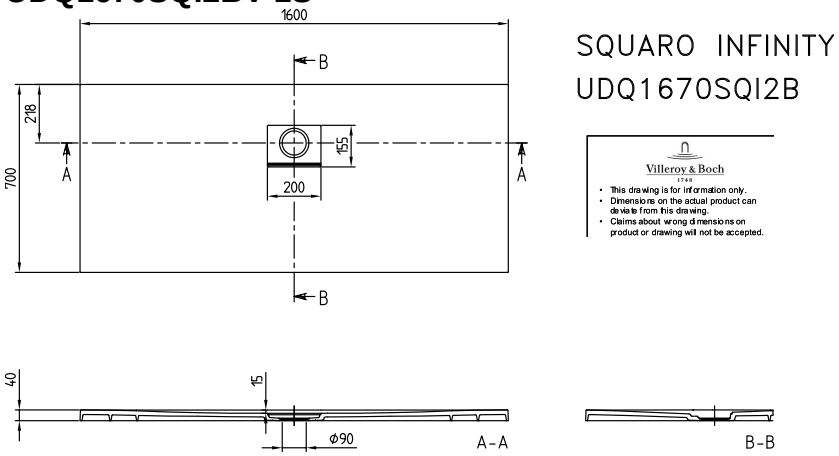
### UDQ1670SQI2BV-1S