FINION VANITY UNIT ANGULAR

PRODUCT INFORMATION

Article title	Villeroy & Boch Finion Vanity unit, with lighting, 2 pull-out compartments, 996 x 591 x 498 mm, Glossy White Lacquer / Walnut Veneer
Article number	F030GNGF
Assembly / Assembly type	wall-mounted
Type of opening	2 pull-out compartments
Equipment	1 x wide glass drawer divider , 2 x pull-out compartment with non-slip mat 3 x narrow glass drawer divider 1 x accessory box S 1 x accessory box M
Scope of delivery	1 x vanity unit , 1 x fastening set
Position of washbasin	washbasin on the middle
Position of shelf unit	left
Depth in mm	498
Width in mm	996
Height in mm	591
Collection	Finion
Suitable for	selected vanity washbasins
Function	• with SoftClosing • with lighting • with push-to-open function
Material front	MDF
Surface of front	Paint
Material body	MDF
Surface of body	Paint
Material shelf element	MDF
Surface of shelf unit	Veneer
Shape	Angular
Colour designation	Glossy White Lacquer
Colour designation of shelf unit	Walnut Veneer
With lighting	Yes
Smart home compatible	No

TECHNICAL DRAWINGS

F030GNGF

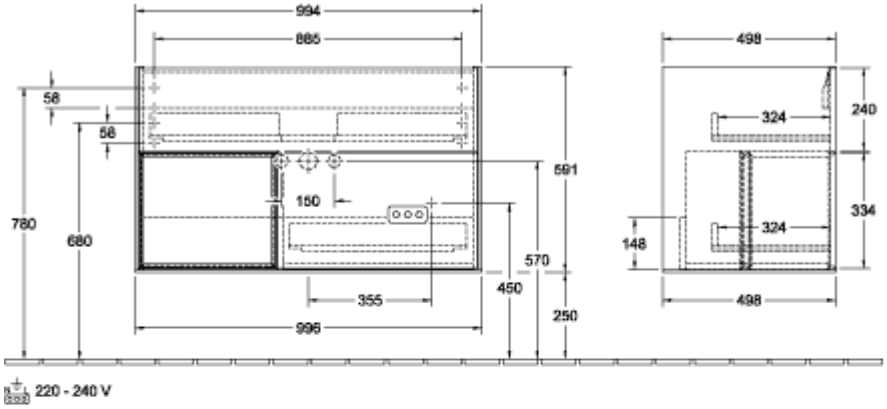

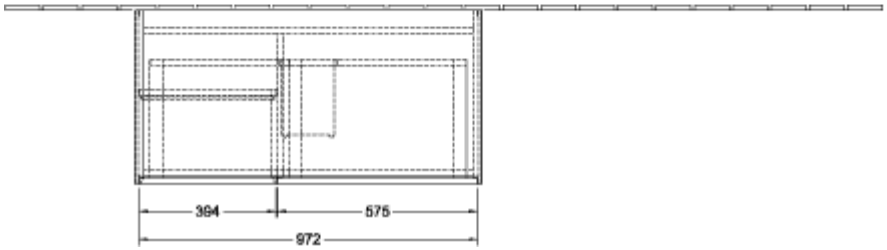
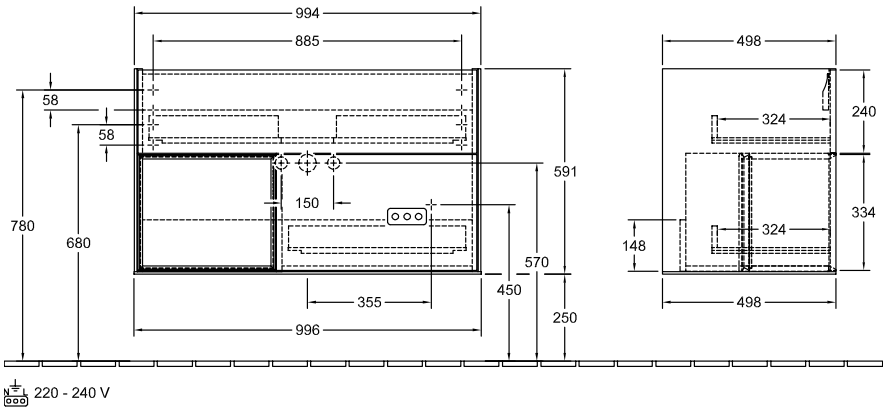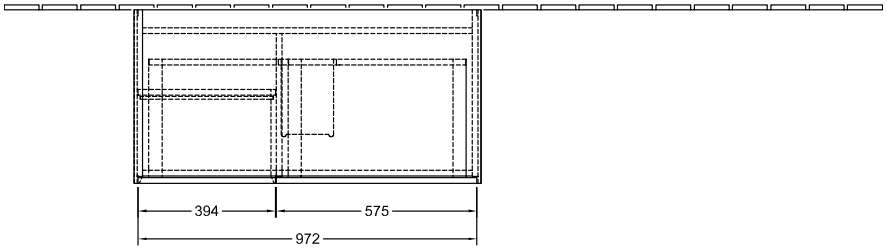
F030GNGF