# MORE TO SEE MIRROR RECTANGLE

## PRODUCT INFORMATION

| | |
|---|---|
| Article title | Villeroy & Boch More To See Mirror, 1200 x 750 x 20 mm |
| Article number | A3101200 |
| Assembly / Assembly type | wall-mounted |
| Scope of delivery | 1 x mirror , 1 x fastening set |
| Depth in mm | 20 |
| Width in mm | 1200 |
| Height in mm | 750 |
| Collection | More To See |
| Material | Glass |
| Shape | Rectangle |
| With lighting | No |
| Smart home compatible | No |

## TECHNICAL DRAWINGS

### A3101200

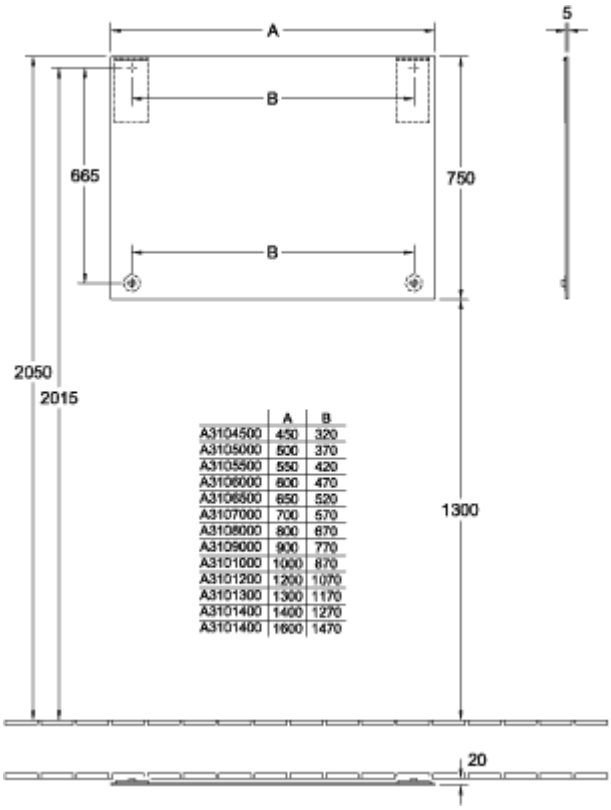


| | A | B |
|---|---|---|
| A3104500 | 450 | 320 |
| A3105000 | 500 | 370 |
| A3105500 | 550 | 420 |
| A3106000 | 600 | 470 |
| A3106500 | 650 | 520 |
| A3107000 | 700 | 570 |
| A3108000 | 800 | 670 |
| A3109000 | 900 | 770 |
| A3101000 | 1000 | 870 |
| A3101200 | 1200 | 1070 |
| A3101300 | 1300 | 1170 |
| A3101400 | 1400 | 1270 |
| A3101400 | 1600 | 1470 |

# A3101200

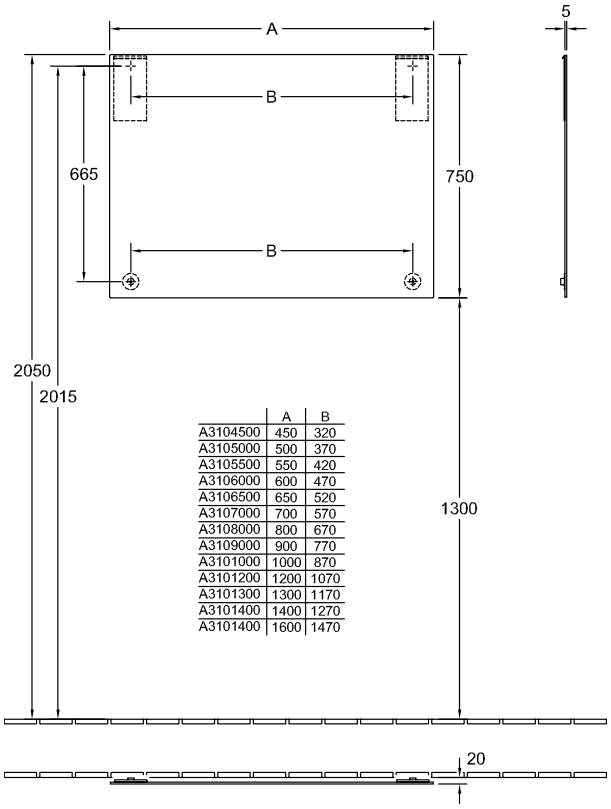


| | A | B |
|---|---|---|
| A3104500 | 450 | 320 |
| A3105000 | 500 | 370 |
| A3105500 | 550 | 420 |
| A3106000 | 600 | 470 |
| A3106500 | 650 | 520 |
| A3107000 | 700 | 570 |
| A3108000 | 800 | 670 |
| A3109000 | 900 | 770 |
| A3101000 | 1000 | 870 |
| A3101200 | 1200 | 1070 |
| A3101300 | 1300 | 1170 |
| A3101400 | 1400 | 1270 |
| A3101400 | 1600 | 1470 |