HOMMAGE CISTERN

PRODUCT INFORMATION

Article title	Villeroy & Boch Hommage Cistern, water inlet from the sides or rear, White Alpin CeramicPlus
Article number	772111R1
Scope of delivery	1 x cistern
Depth in mm	195
Width in mm	380
Height in mm	365
Collection	Hommage
Material	Sanitary ceramics
Colour name	White Alpin CeramicPlus
Other material	Push button: ABS Flushing mechanism: Plastic
Other surfaces	Push button: chrome, glossy, Flushing mechanism: glossy
Colour designation	White Alpin
Other colour designations	Push button: Chrome, Flushing mechanism: White Alpin

TECHNICAL DRAWINGS

772111R1

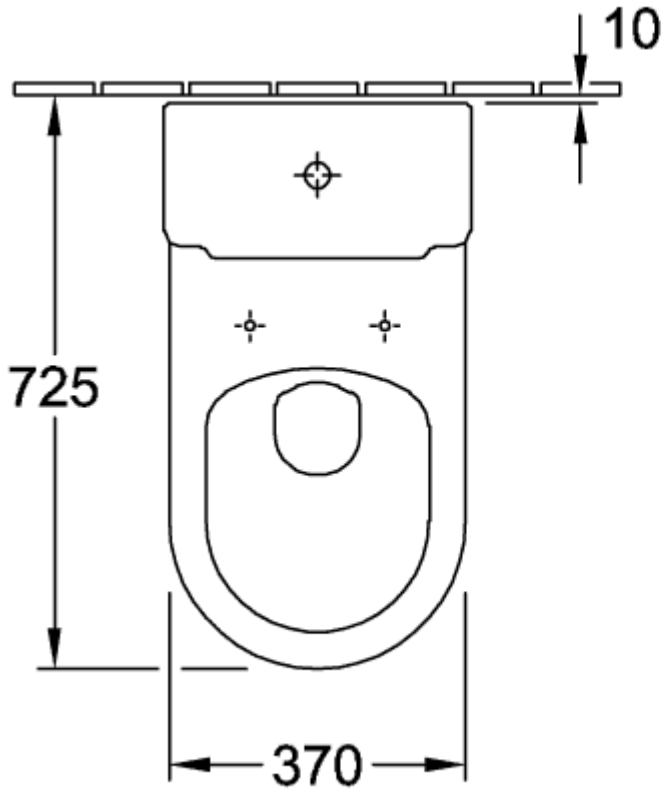
10
725
370

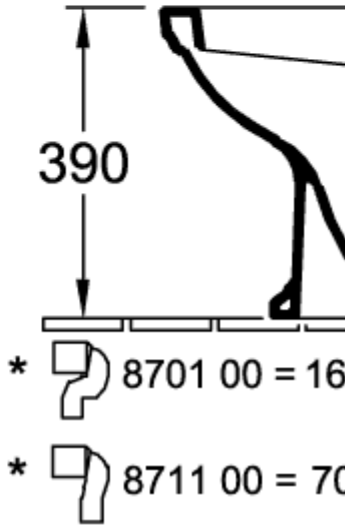
390
* 8701 00 = 16
* 8711 00 = 70

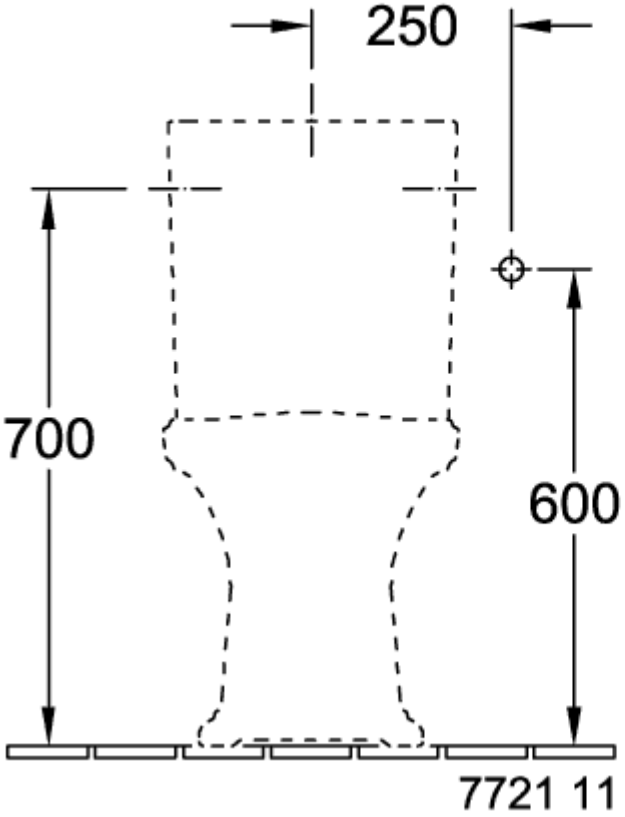
250
700
600
7721 11

100
700

772111R1

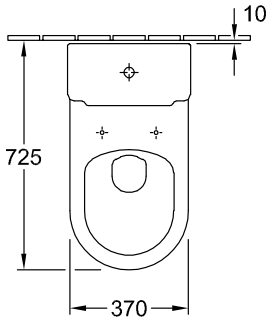
10
725
370

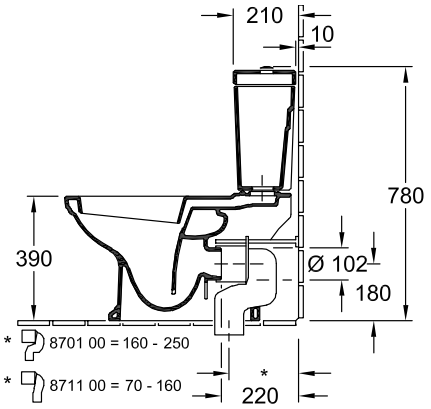
210
10
780
390
Ø 102
180
* 8701 00 = 160 - 250
* 8711 00 = 70 - 160
*
220

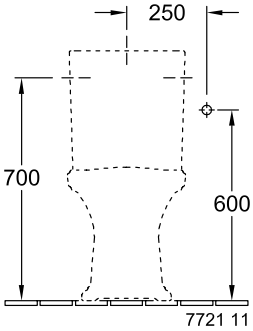
250
700
600
7721 11

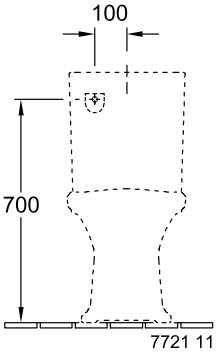
100
700
7721 11

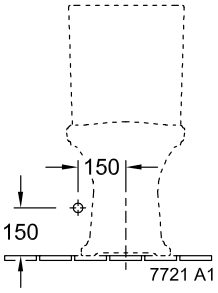
150
150
7721 A1