SUBWAY INFINITY RECTANGULAR SHOWER TRAY RECTANGLE

PRODUCT INFORMATION

Article title	Villeroy & Boch Subway Infinity Rectangular shower tray, 1600 x 1000 x 40 mm, White Alpin
Article number	62324501
Assembly / Assembly type	flush-fitting installation, Installation on tiles|Installation on a base
Assembly instructions	The installation height of the shower tray can be reduced by 30 mm if the outlet fitting 9226 00 XX is used. Attention! This outlet fitting does not conform to EN274., These shower trays are not cut and can be used for all installation types (recommended: ViFrame installation system)
Scope of delivery	1 x rectangular shower tray
Length in mm	1600
Width in mm	1000
Height in mm	40
Interior depth	12
Collection	Subway Infinity
Material	Sanitary ceramics
surface	matt
Colour name	White Alpin
Shape	Rectangle
Colour designation	White Alpin
Antibacterial surface (with AntiBac)	No
Easy surface cleaning (CeramicPlus)	No
With slip resistance	Yes

TECHNICAL DRAWINGS

62324501

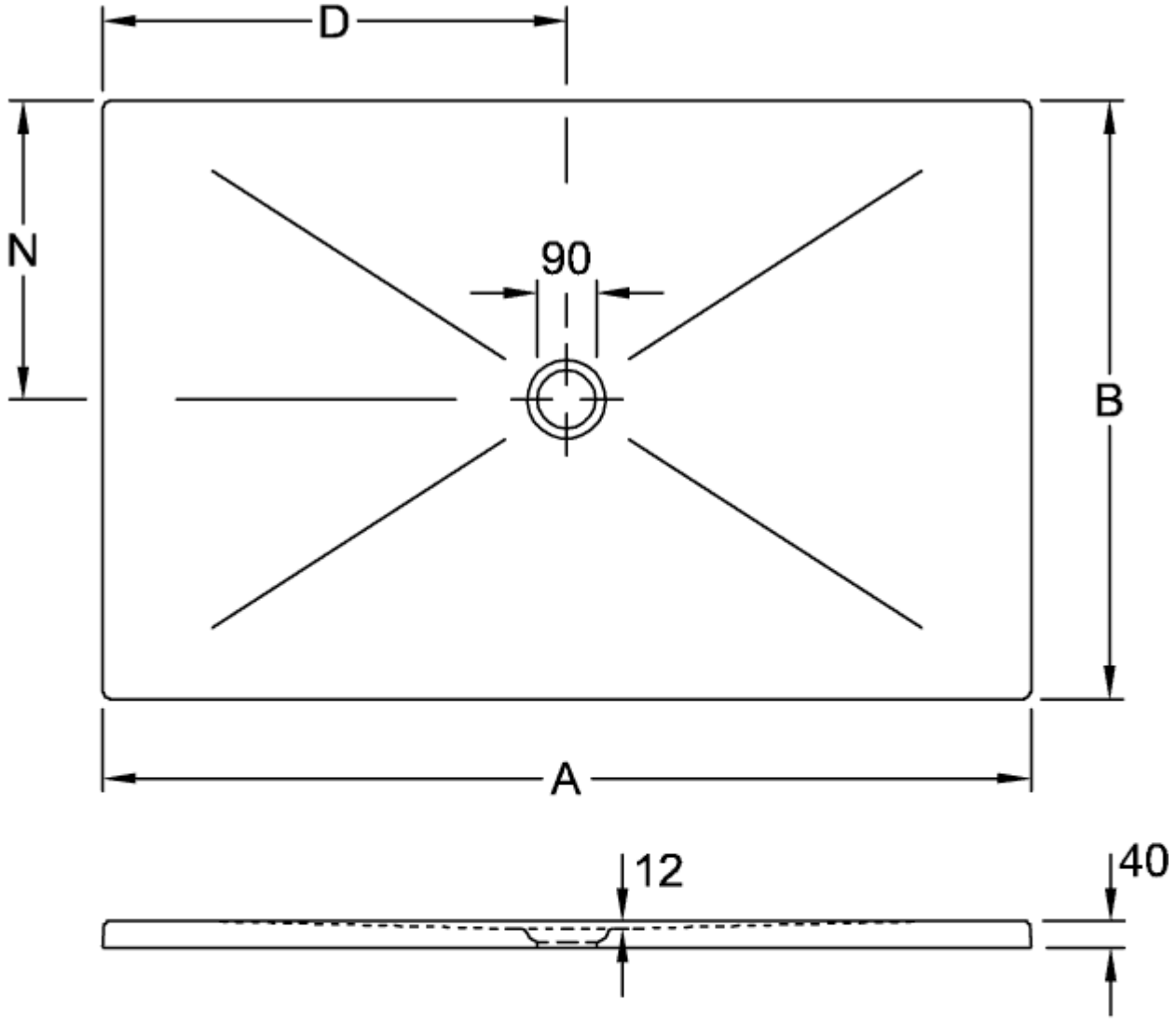

	A	B	D	N
6232 45	1600	1000	800	500
6231 S4	1400	900	700	450
6230 N4	1200	900	600	450
6229 J3	1000	800	500	400
6228 J5	1000	1000	500	500

62324501

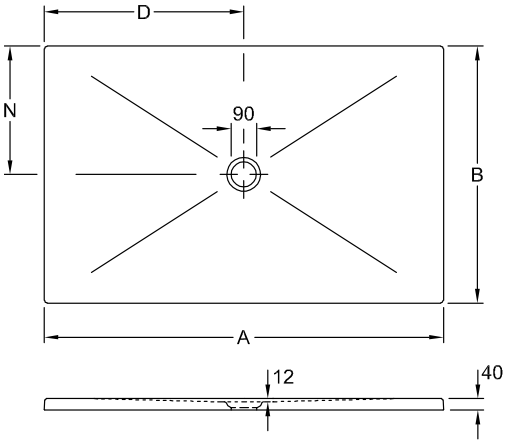

	A	B	D	N
6232 45	1600	1000	800	500
6231 S4	1400	900	700	450
6230 N4	1200	900	600	450
6229 J3	1000	800	500	400
6228 J5	1000	1000	500	500