LOOP & FRIENDS UNDERCOUNTER WASHBASIN OVAL

PRODUCT INFORMATION

Article title	Villeroy & Boch Loop & Friends Undercounter washbasin, 430 x 285 x 185 mm, White Alpin, with overflow
Article number	61611001
Assembly / Assembly type	Undercounter
Assembly instructions	the hole for the washbasin can only be cut out using the original washbasin because tolerances of several millimetres are possible, installation possible in natural stone and laminate countertops
Scope of delivery	1 x undercounter washbasin , 1 x fastening set
Depth in mm	285
Width in mm	430
Height in mm	185
Interior depth	140
Collection	Loop & Friends
Material	Sanitary ceramics
surface	glossy
Colour name	White Alpin
With overflow	Yes
Shape	Oval
Colour designation	White Alpin
Antibacterial surface (with AntiBac)	No
Easy surface cleaning (CeramicPlus)	No
Number of bowls	1

TECHNICAL DRAWINGS

61611001

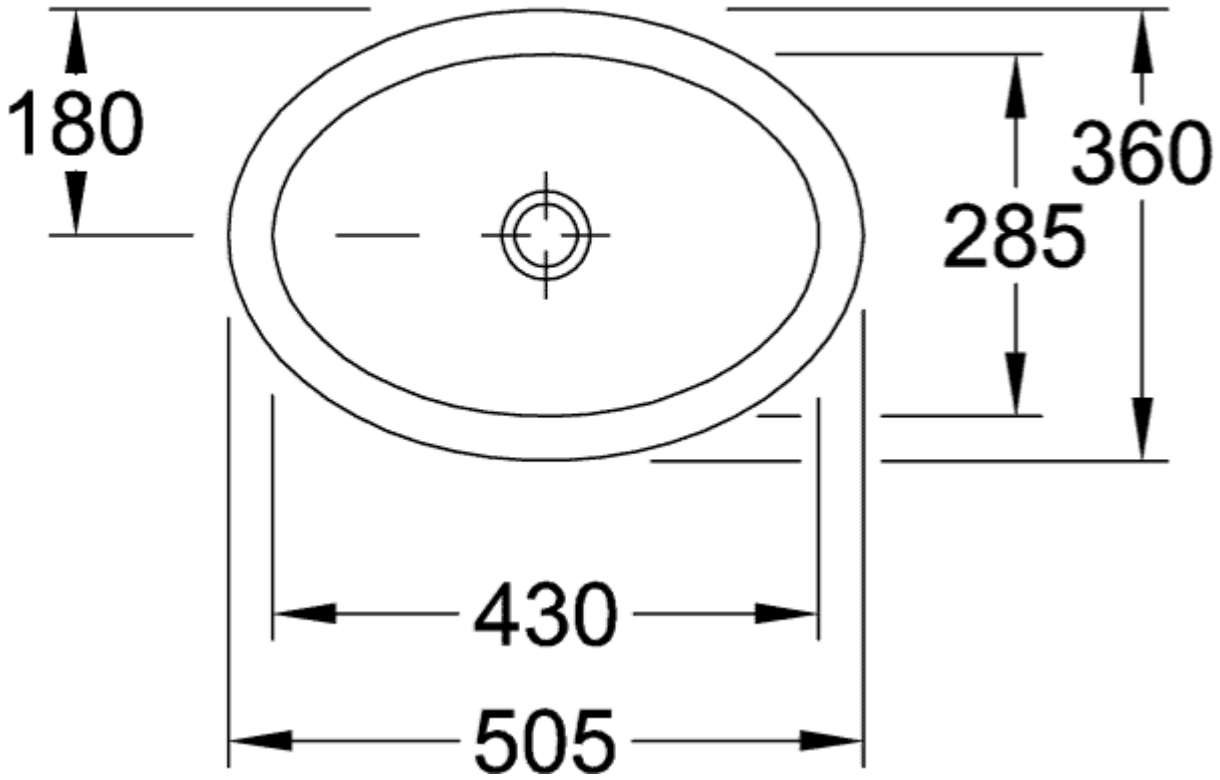

61611001

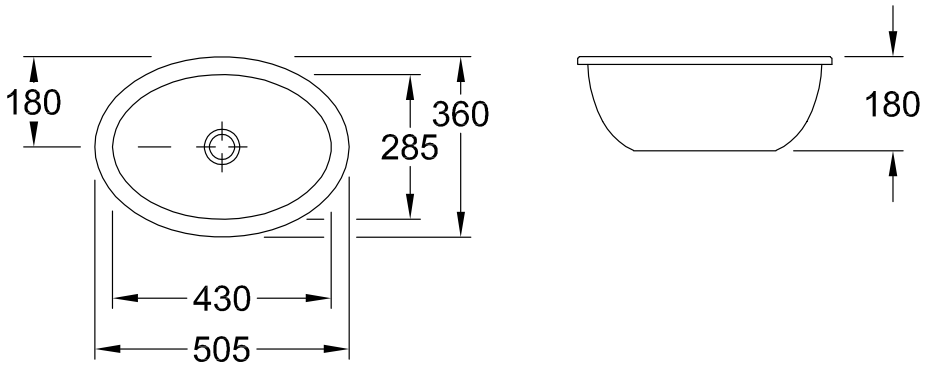

61611001

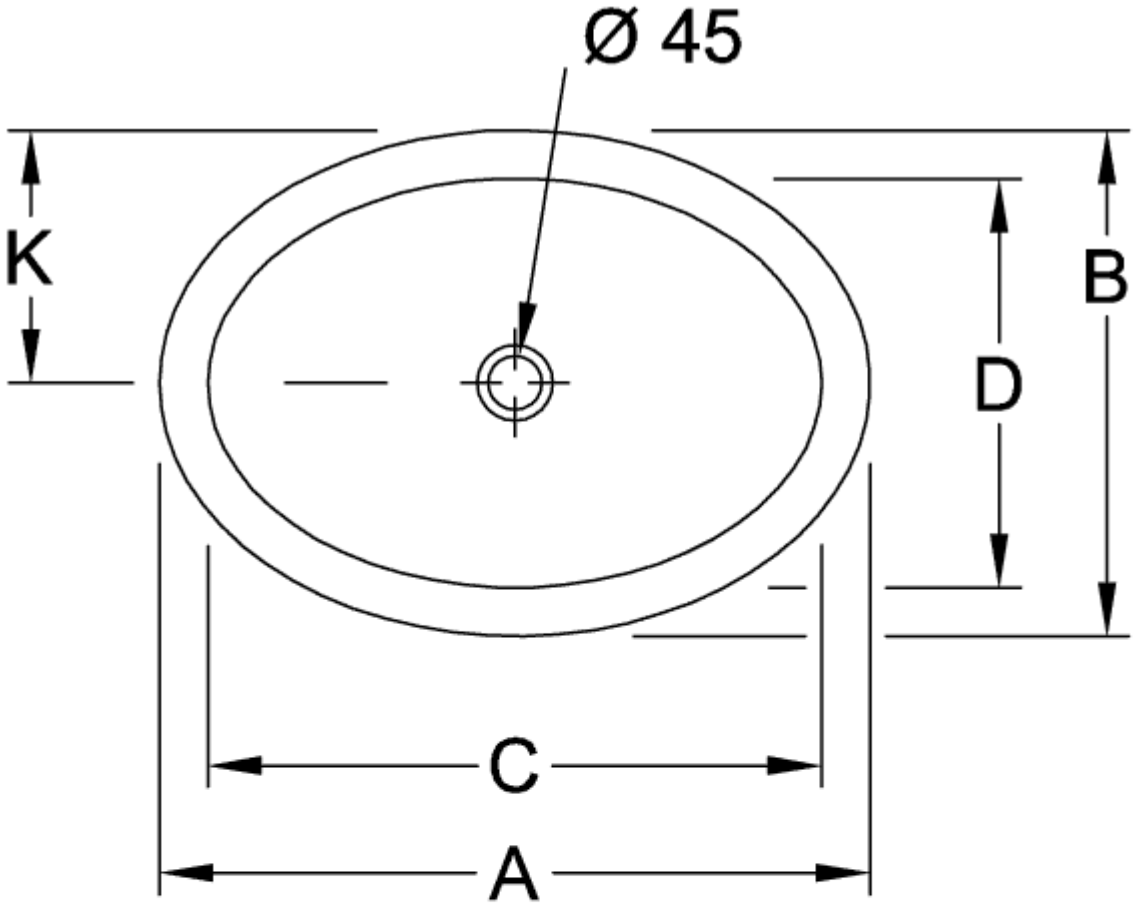

	A	B	C	D	G	K	L
6161 30	660	470	560	375	220	235	180
6161 31	660	470	560	375	220	235	180
6161 20	570	405	485	325	200	203	160
6161 21	570	405	485	325	200	203	160
6161 10	505	360	430	285	180	180	140
6161 11	505	360	430	285	180	180	140
6161 00	450	320	385	255	160	160	120
6161 01	450	320	385	255	160	160	120

61611001

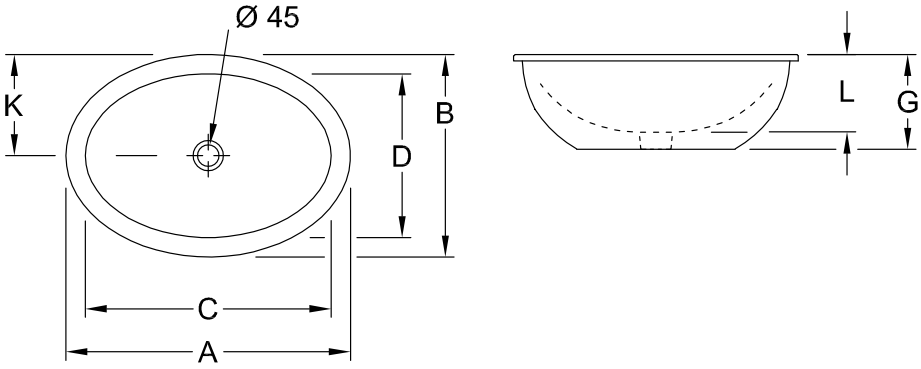

	A	B	C	D	G	K	L
6161 30	660	470	560	375	220	235	180
6161 31	660	470	560	375	220	235	180
6161 20	570	405	485	325	200	203	160
6161 21	570	405	485	325	200	203	160
6161 10	505	360	430	285	180	180	140
6161 11	505	360	430	285	180	180	140
6161 00	450	320	385	255	160	160	120
6161 01	450	320	385	255	160	160	120