ARCHITECTURA WASHDOWN TOILET FOR CLOSE-COUPLED WC-SUITE RECTANGLE

PRODUCT INFORMATION

Article title	Villeroy & Boch Architectura Washdown toilet for close-coupled WC-suite, floor-standing, with AntiBac, White Alpin AntiBac
Article number	568710T1
Assembly / Assembly type	floor-standing
Assembly instructions	recommendation: to be installed from the wall at: 15 mm
Scope of delivery	1 x washdown toilet , 1 x fastening set
Depth in mm	700
Width in mm	370
Height in mm	400
Collection	Architectura
Suitable for	Mounted cistern
Innovative flushing technology (with TwistFlush)	No
Flush volume l	3 / 4,5 l
Wall-mounted - floor-standing	floor-standing
Material	Sanitary ceramics
surface	glossy
Colour name	White Alpin AntiBac
Shape	Rectangle
Colour designation	White Alpin
Antibacterial surface (with AntiBac)	Yes
Easy surface cleaning (CeramicPlus)	No
Rimless (mit DirectFlush)	No
Flush type	Washdown toilet
Integrated freshness solution (with ViFresh)	No
Outlet / outlet	horizontal outlet

TECHNICAL DRAWINGS

568710T1

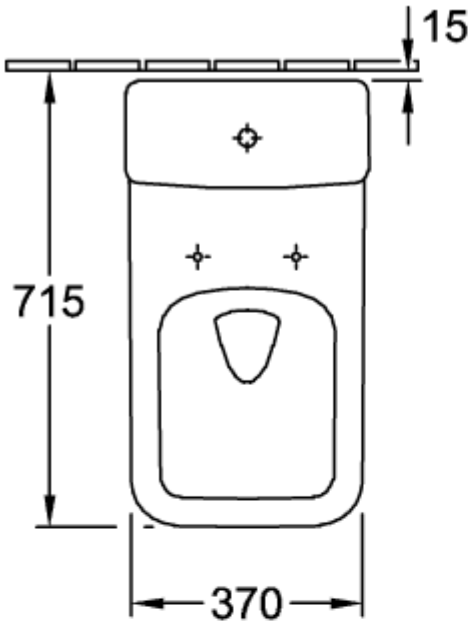
15
715
370

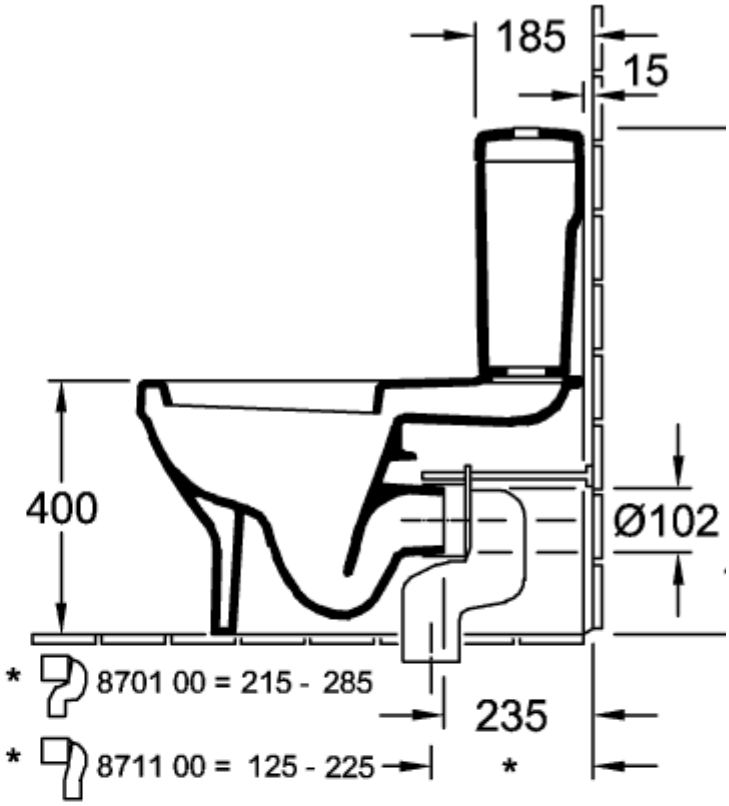
185
15
400
Ø102
* 8701 00 = 215 - 285
235
* 8711 00 = 125 - 225
*

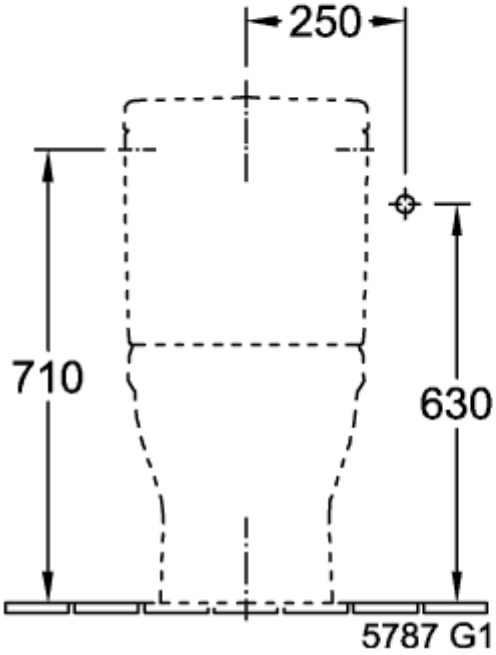
250
710
630
5787 G1

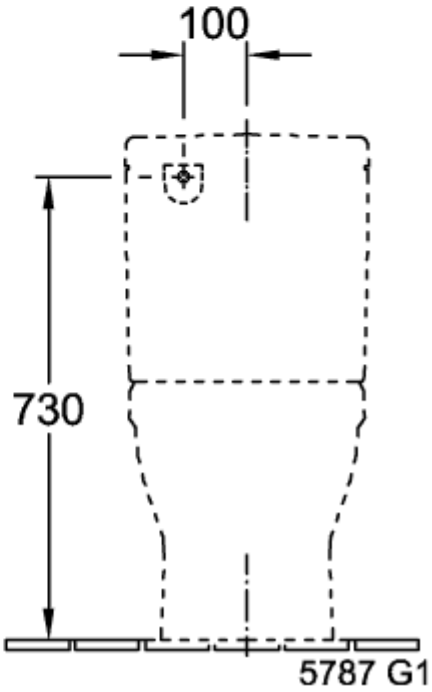
100
730
5787 G1

568710T1

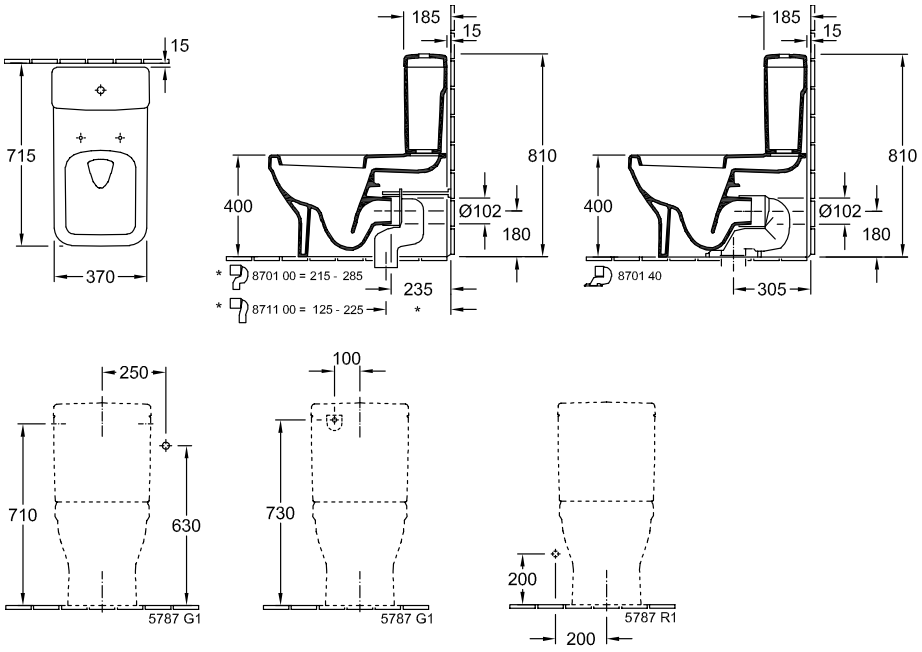
15
715
370
185
15
810
400
Ø102
180
* 8701 00 = 215 - 285
235
* 8711 00 = 125 - 225
*
185
15
810
400
Ø102
180
8701 40
305
250
710
630
5787 G1
100
730
5787 G1
200
5787 R1
200