O.NOVO WASHDOWN TOILET FOR CLOSE-COUPLED WC-SUITE OVAL

PRODUCT INFORMATION

Article title	Villeroy & Boch O.novo Washdown toilet for close-coupled WC-suite, floor-standing, White Alpin
Article number	56581001
Assembly / Assembly type	floor-standing
Assembly instructions	recommendation: to be installed from the wall at: 15 mm
Scope of delivery	1 x washdown toilet , 1 x fastening set
Depth in mm	640
Width in mm	360
Height in mm	400
Collection	O.novo
Suitable for	Mounted cistern
Innovative flushing technology (with TwistFlush)	No
Flush volume l	3 / 4,5 l
Wall-mounted - floor-standing	floor-standing
Material	Sanitary ceramics
surface	glossy
Colour name	White Alpin
Shape	Oval
Colour designation	White Alpin
Antibacterial surface (with AntiBac)	No
Easy surface cleaning (CeramicPlus)	No
Rimless (mit DirectFlush)	No
Flush type	Washdown toilet
Integrated freshness solution (with ViFresh)	No
Outlet / outlet	horizontal outlet

TECHNICAL DRAWINGS

56581001

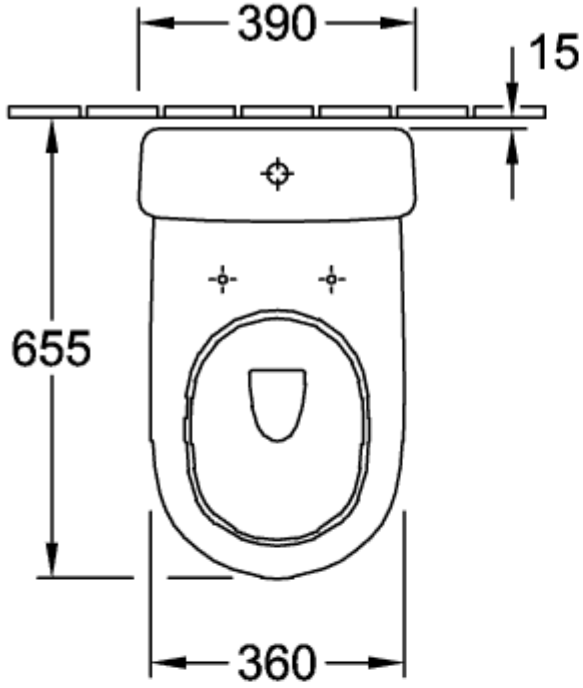

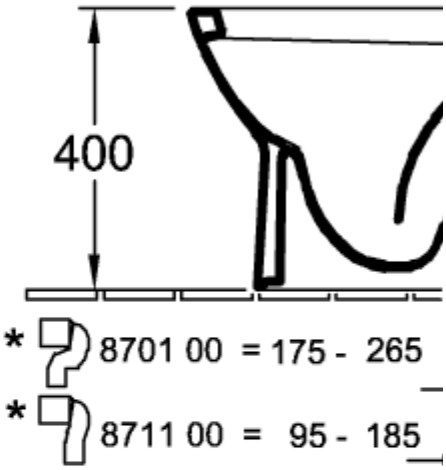

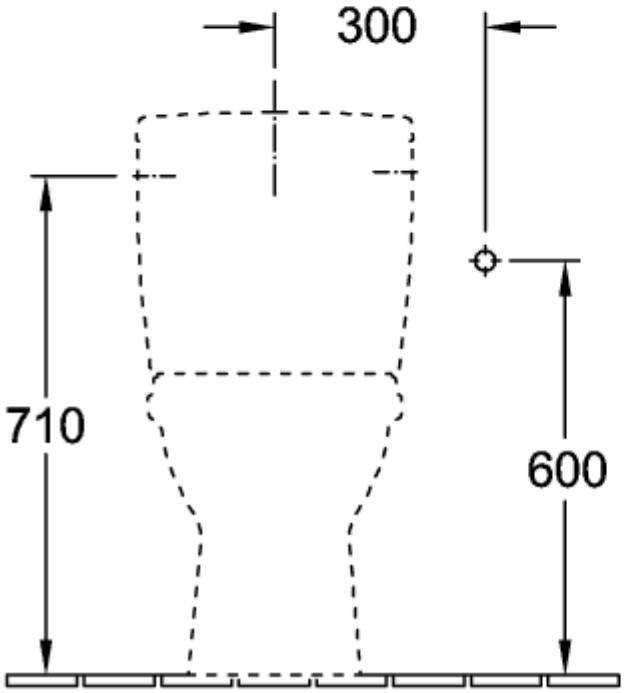

5758-G1

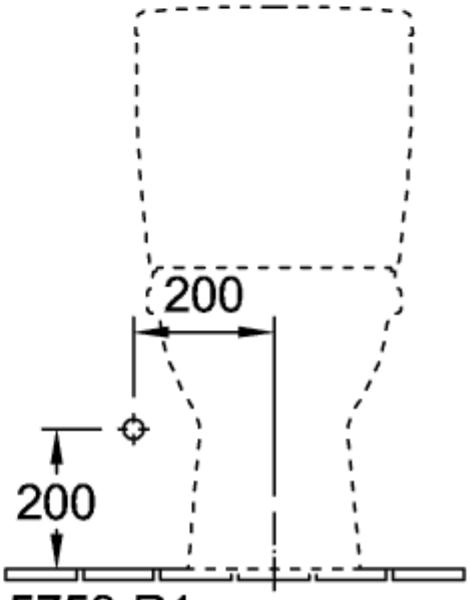

5758-R1

56581001

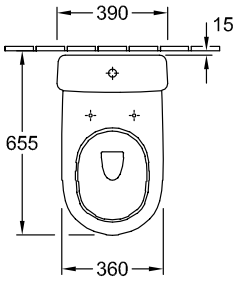
390
15
655
360

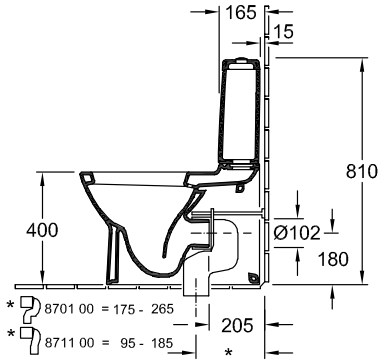
165
15
810
400
Ø102
180
* 8701 00 = 175 - 265
* 8711 00 = 95 - 185
205
*

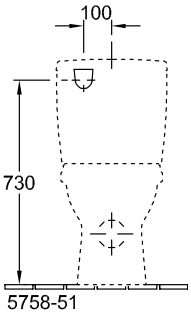
100
730
5758-51

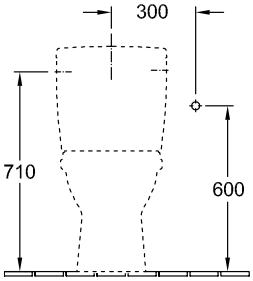
300
710
600
5758-G1

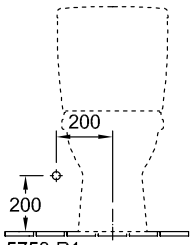
200
200
5758-R1

56581001

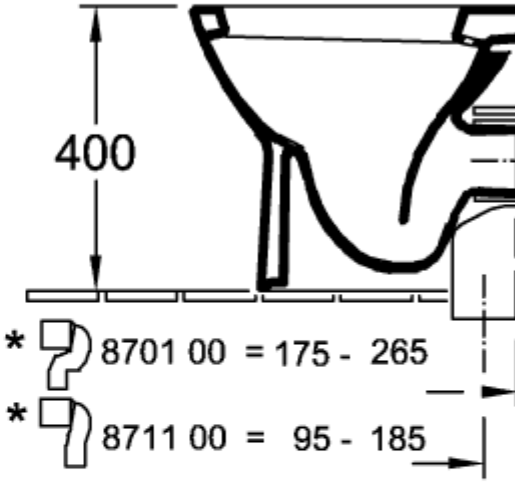

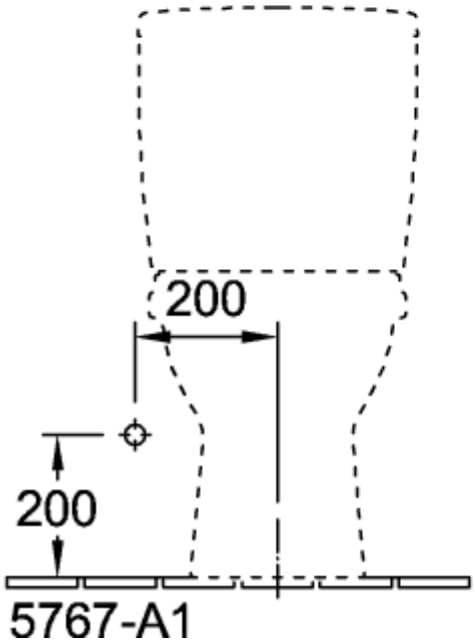

56581001

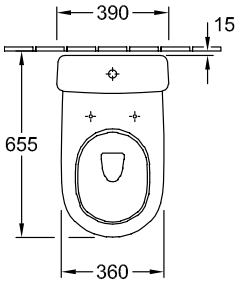

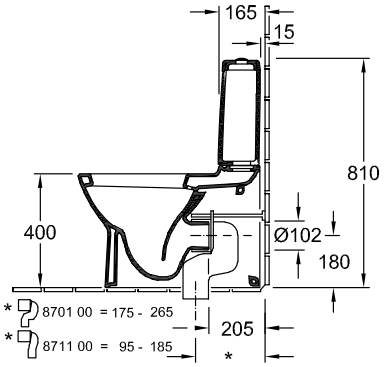

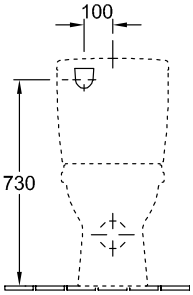

5767-N1

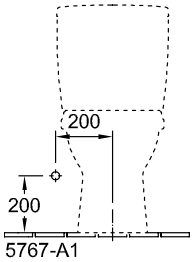

5767-A1

56581001

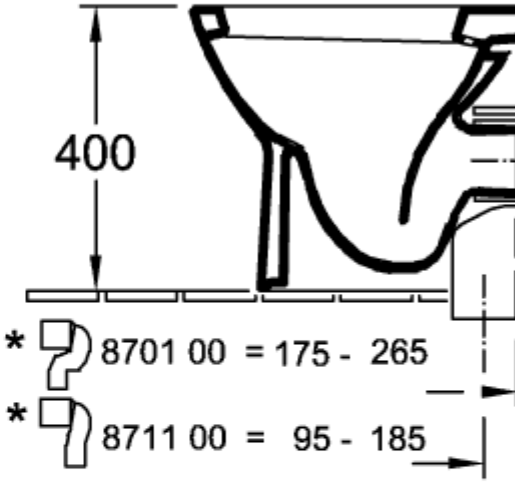

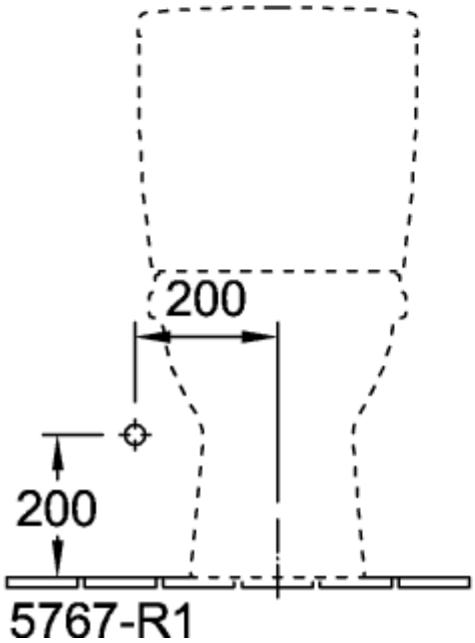

56581001

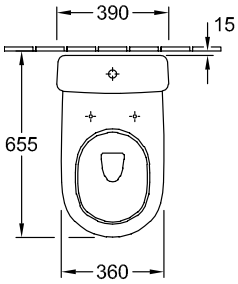

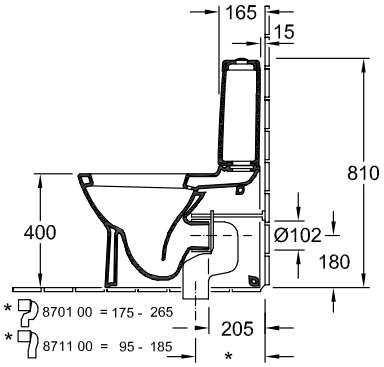

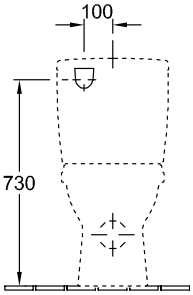

5767-N1 / N8

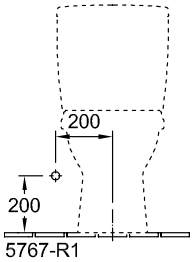

5767-R1

56581001

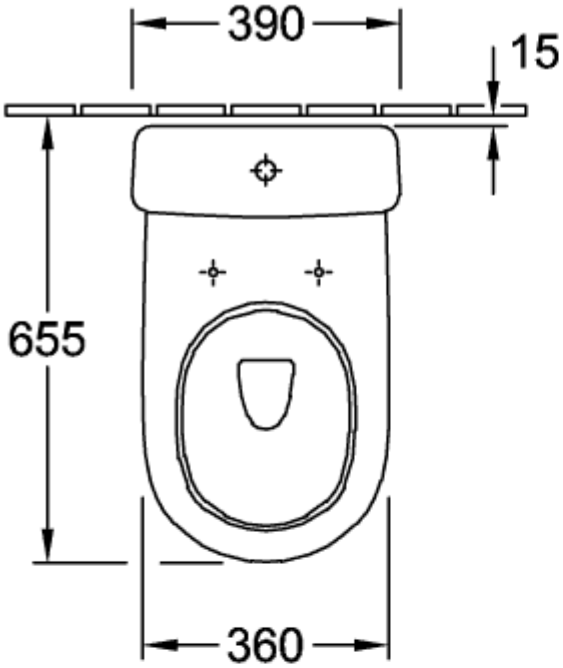

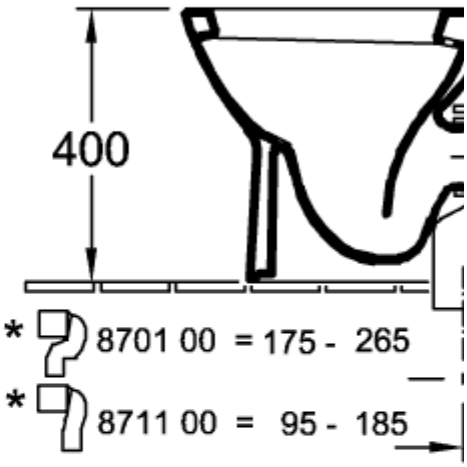

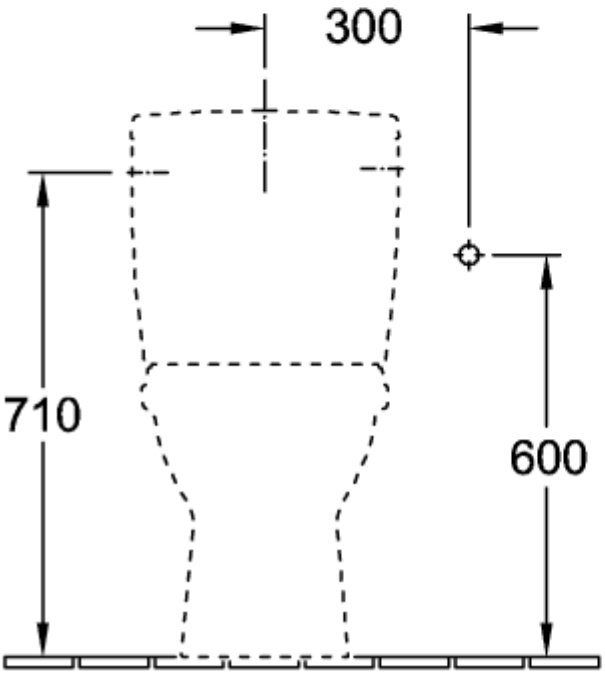

5788-G1 / 21

56581001

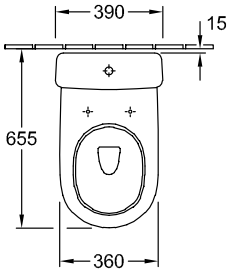
390
15
655
360

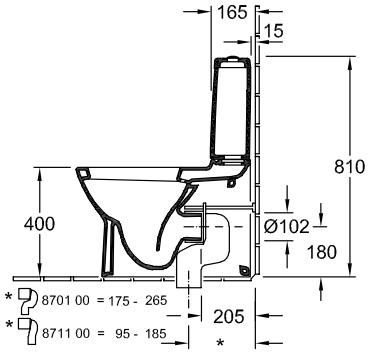
165
15
810
400
Ø102
180
* 8701 00 = 175 - 265
* 8711 00 = 95 - 185
205
*

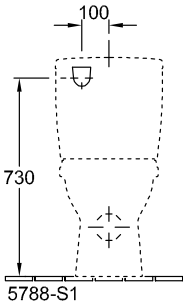
100
730
5788-S1

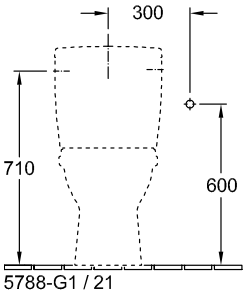
300
710
600
5788-G1 / 21