MEMENTO WASHDOWN TOILET RECTANGLE

PRODUCT INFORMATION

Article title	Villeroy & Boch Memento Washdown toilet, wall-mounted, White Alpin
Article number	56281001
Assembly / Assembly type	wall-mounted
Scope of delivery	1 x washdown toilet , 1 x fastening set
Depth in mm	560
Width in mm	375
Height in mm	355
Collection	Memento
Suitable for	Concealed cistern
Innovative flushing technology (with TwistFlush)	No
Flush volume l	3 / 6 l
Wall-mounted - floor-standing	wall-mounted
Material	Sanitary ceramics
surface	glossy
Colour name	White Alpin
Shape	Rectangle
Colour designation	White Alpin
Antibacterial surface (with AntiBac)	No
Easy surface cleaning (CeramicPlus)	No
Rimless (mit DirectFlush)	No
Flush type	Washdown toilet
Integrated freshness solution (with ViFresh)	No
Outlet / outlet	horizontal outlet

TECHNICAL DRAWINGS

56281001

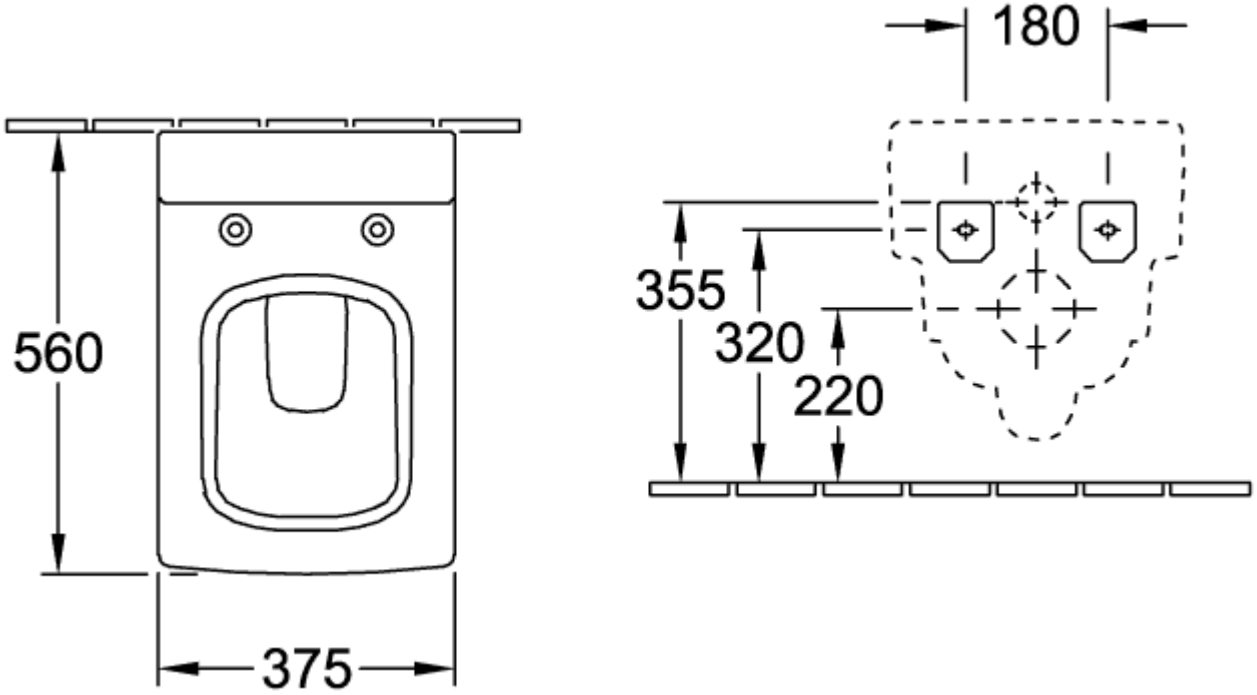
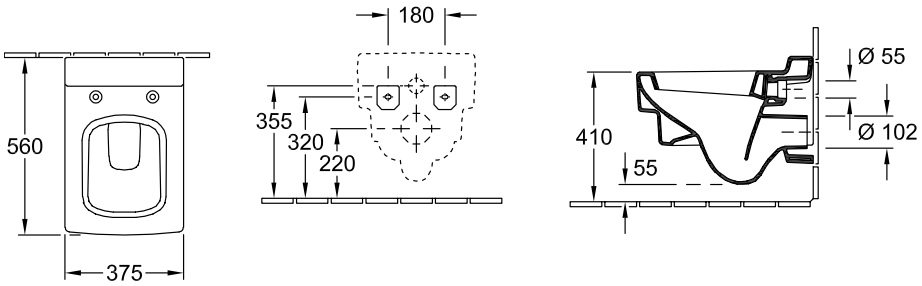
56281001