# O.NOVO TRAP COVER

## PRODUCT INFORMATION

| | |
|---|---|
| Article title | Villeroy & Boch O.novo Trap cover, 225 x 320 x 290 mm, White Alpin |
| Article number | 52660001 |
| Scope of delivery | 1 x trap cover , 1 x fastening set |
| Depth in mm | 320 |
| Width in mm | 225 |
| Height in mm | 290 |
| Collection | O.novo |
| Material | Sanitary ceramics |
| Colour name | White Alpin |
| Colour designation | White Alpin |

## TECHNICAL DRAWINGS

**52660001**

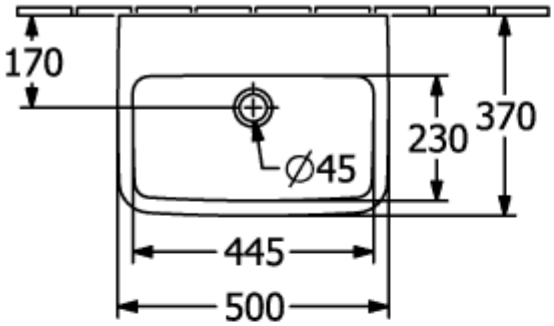


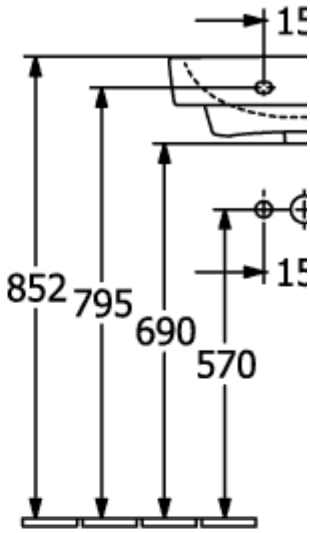


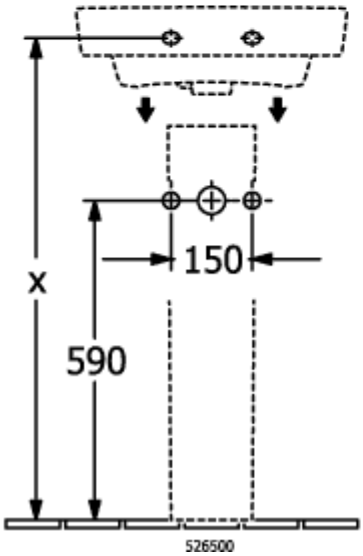


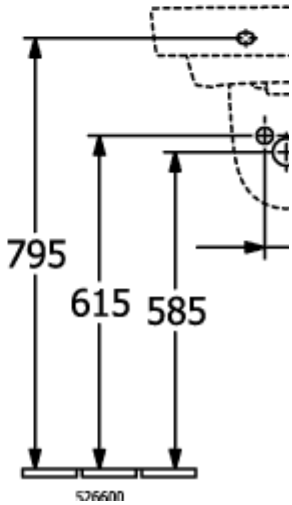

## 52660001

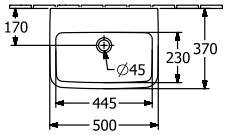


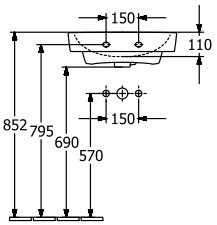


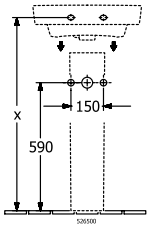


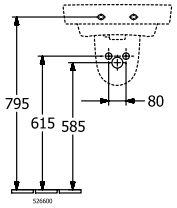


## 52660001

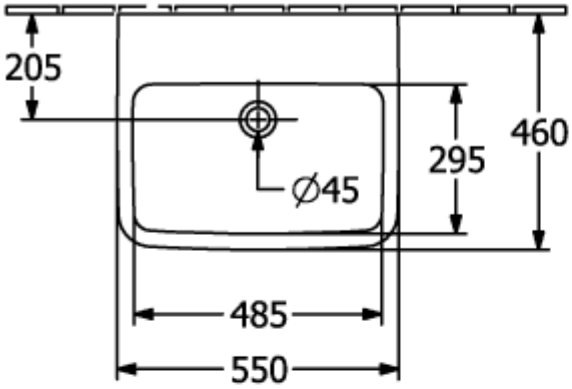


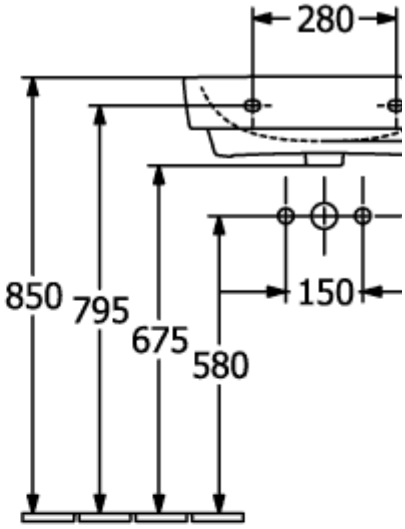


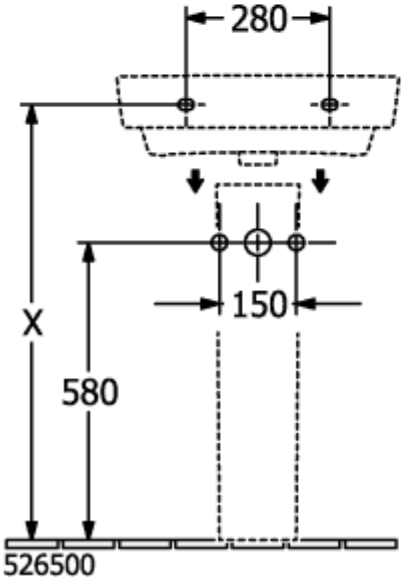


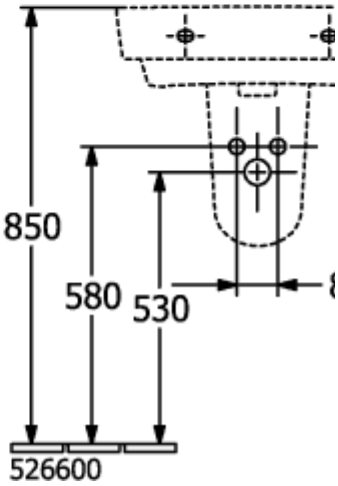

## 52660001

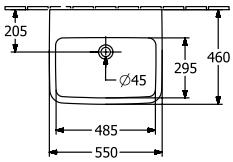


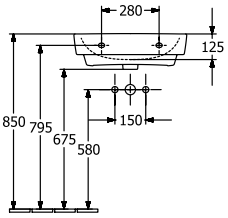


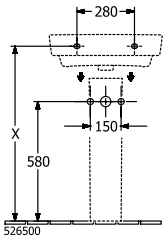


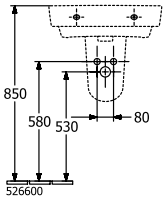


## 52660001

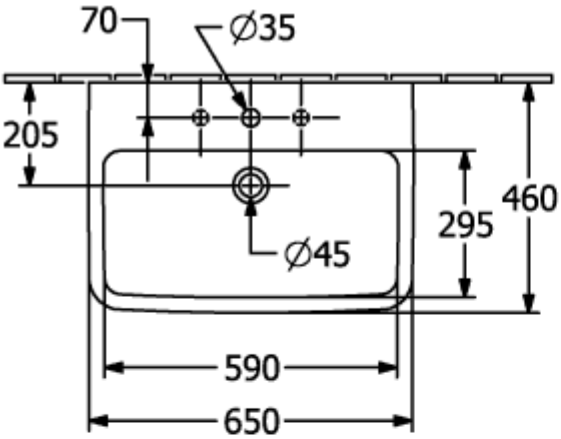


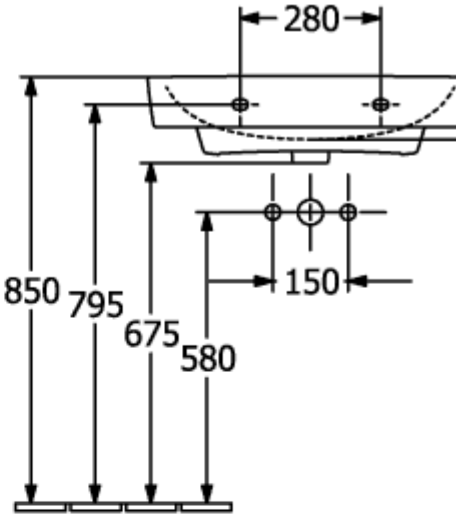


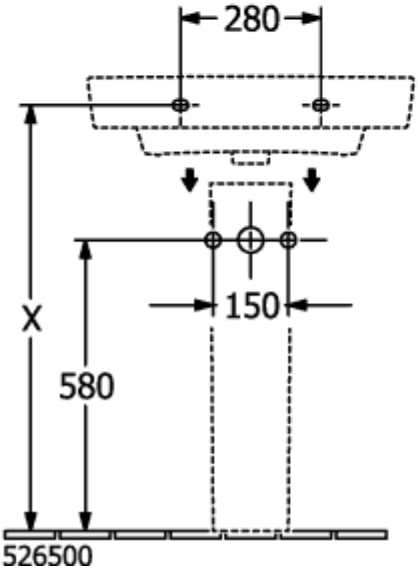


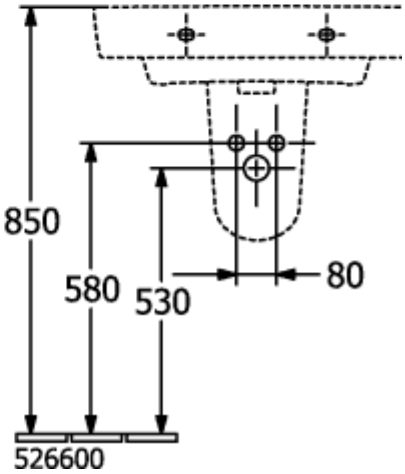

# 52660001

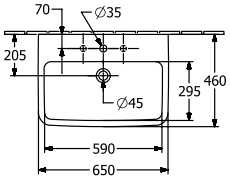
70
∅35
205
460
295
∅45
590
650

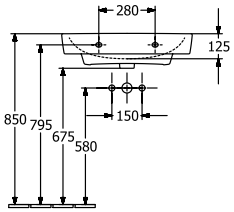
280
125
850
795
675
580
150

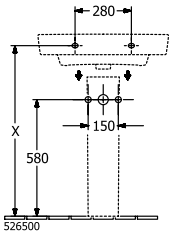
280
X
150
580
526500

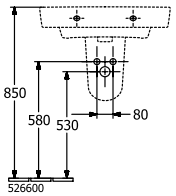
850
580
530
80
526600

**52660001**

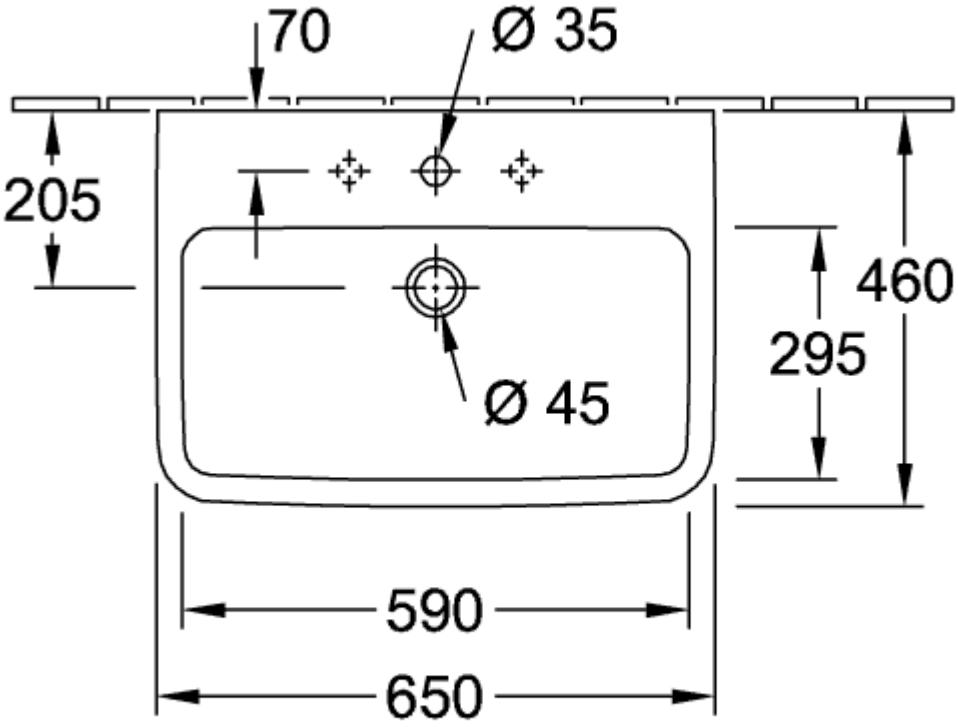
70
Ø 35
205
460
295
Ø 45
590
650

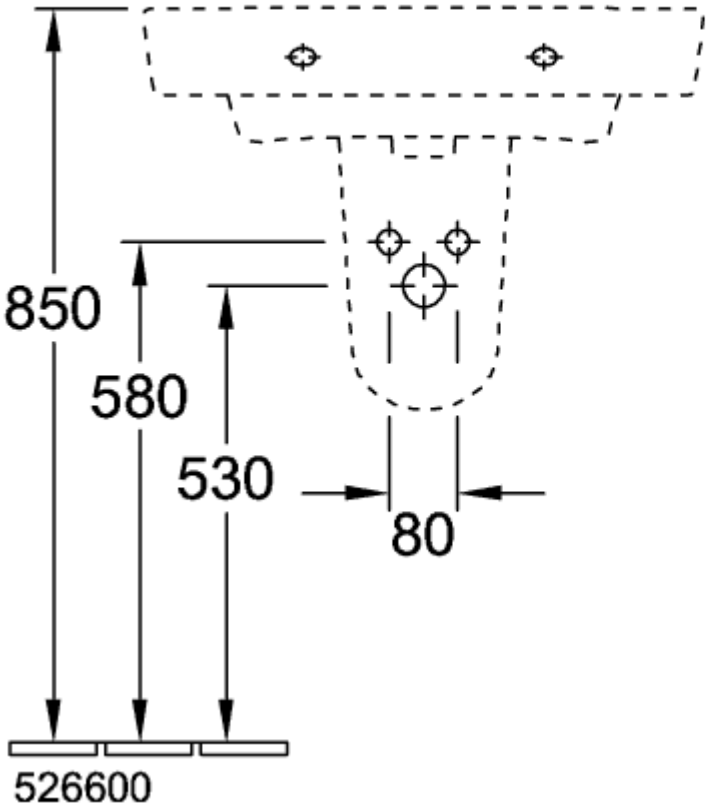
850
580
530
80
526600

## 52660001

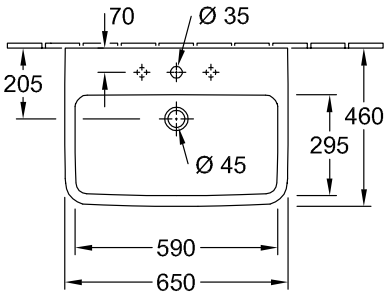
70
Ø 35
205
460
295
Ø 45
590
650

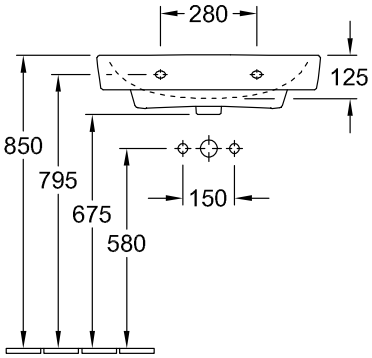
280
125
850
795
675
580
150

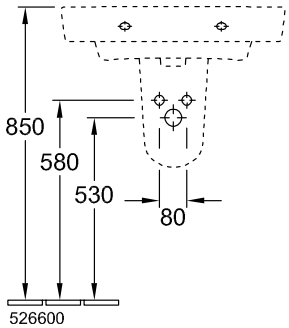
850
580
530
80
526600

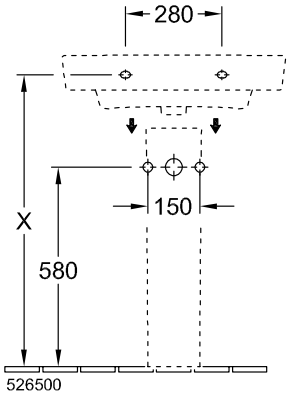
280
150
X
580
526500

**52660001**

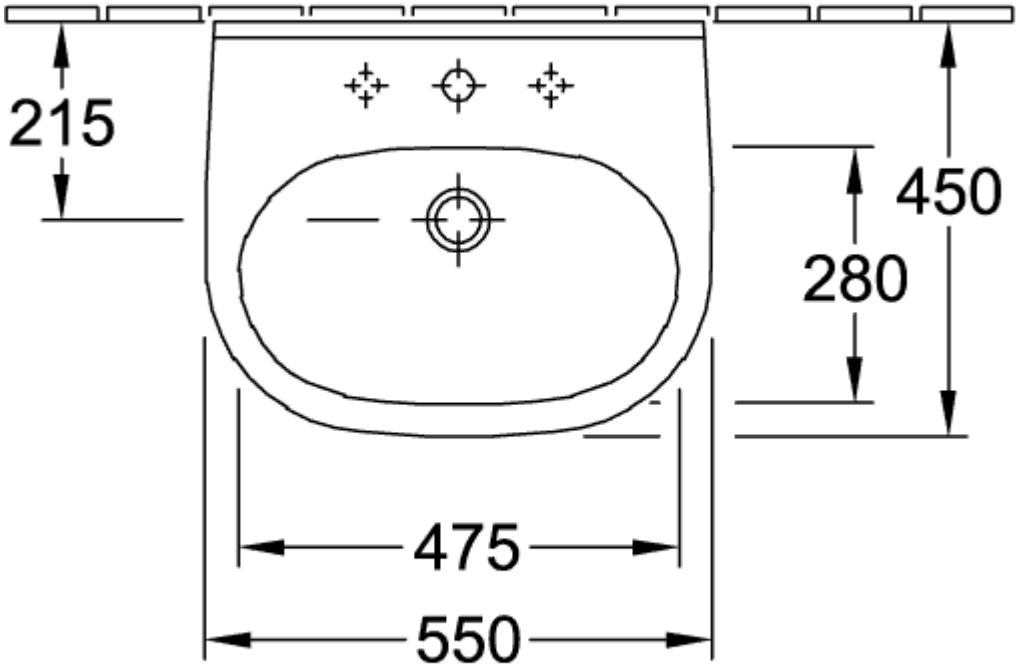


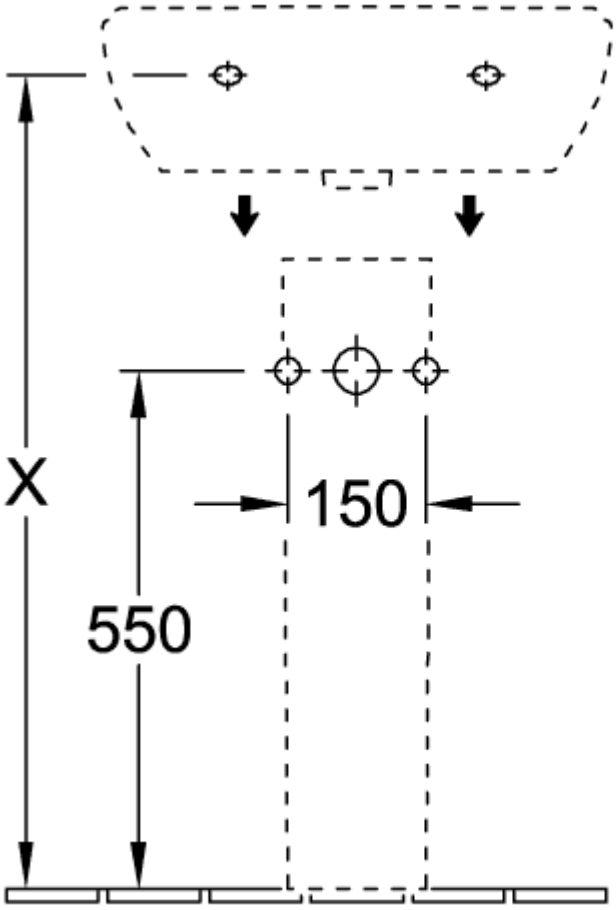


5265 00

## 52660001

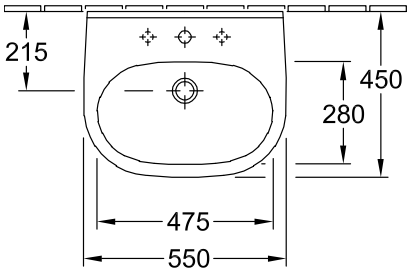


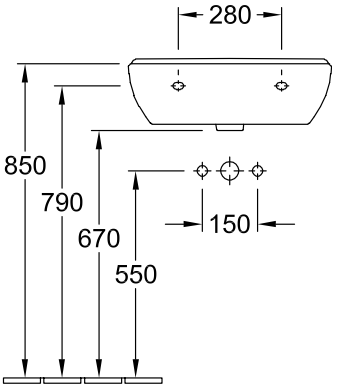


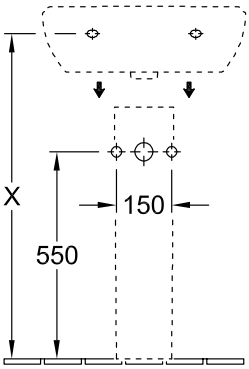


5265 00

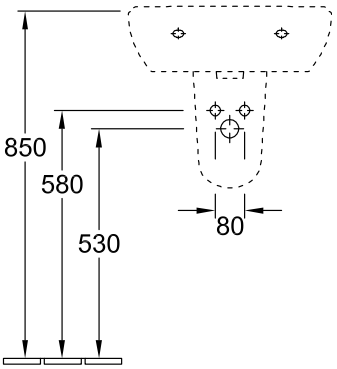


5266 00

**52660001**

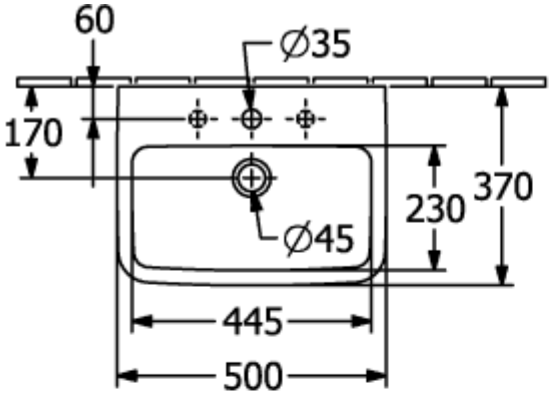


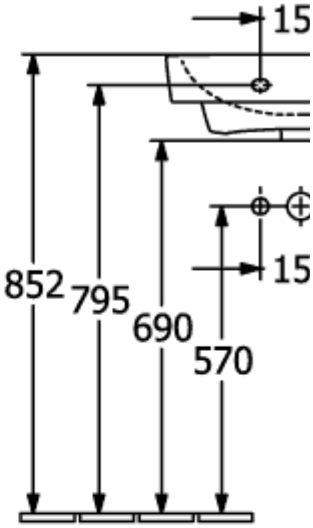


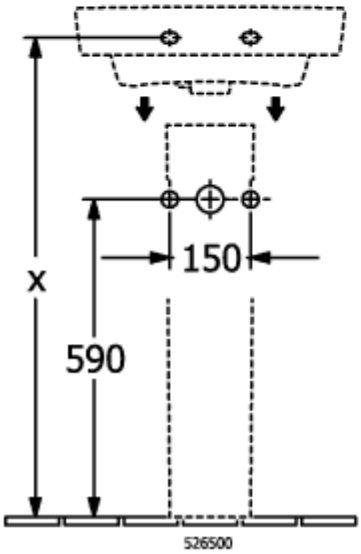


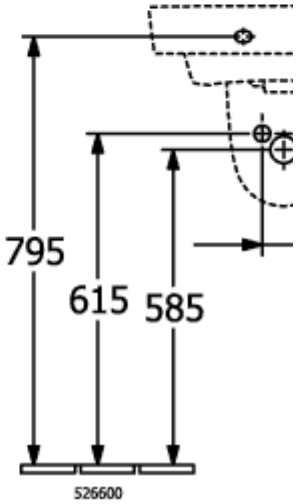


**52660001**

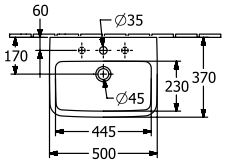


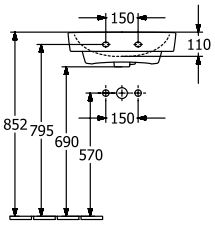


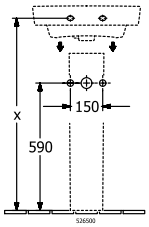


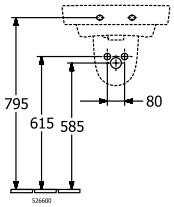

**52660001**

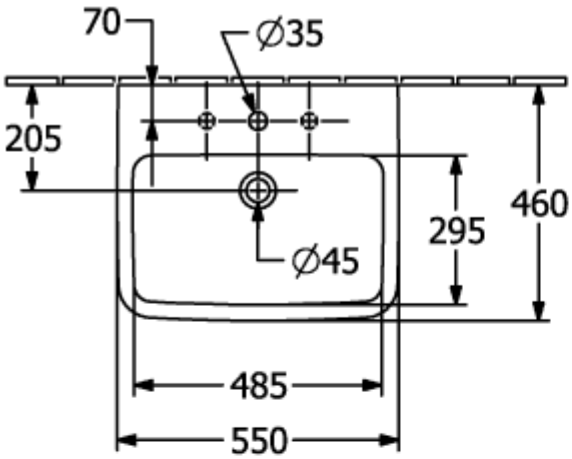


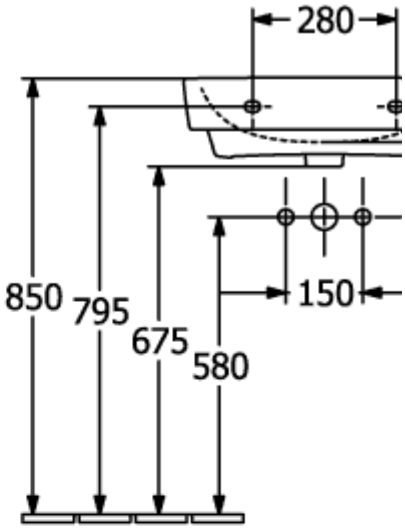


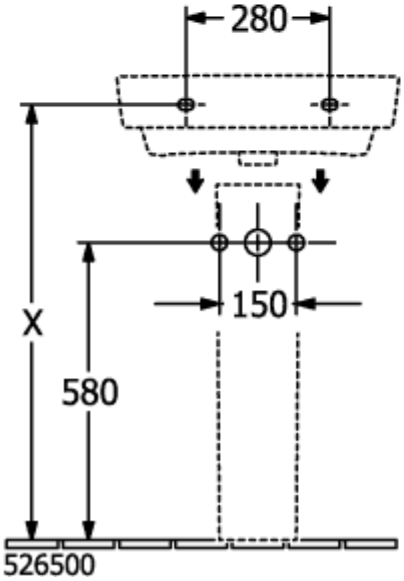


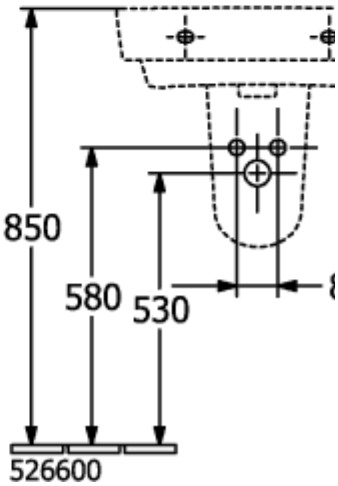


**52660001**

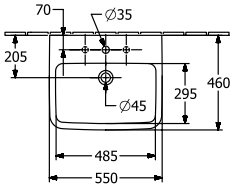


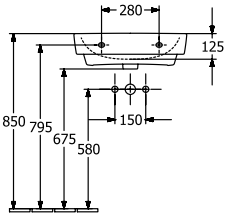


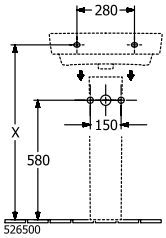


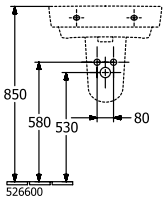

**52660001**

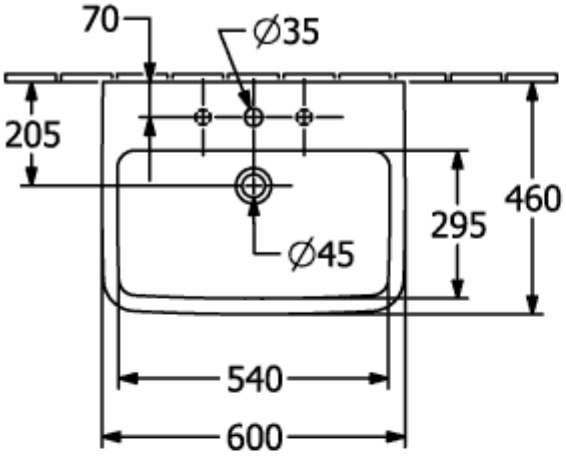


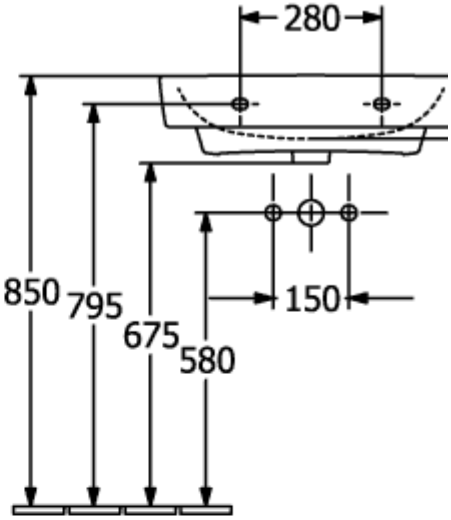


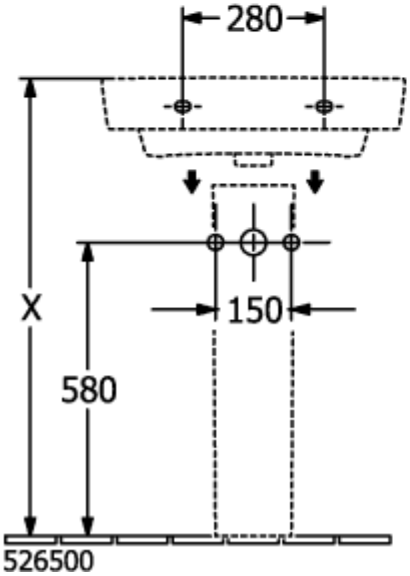


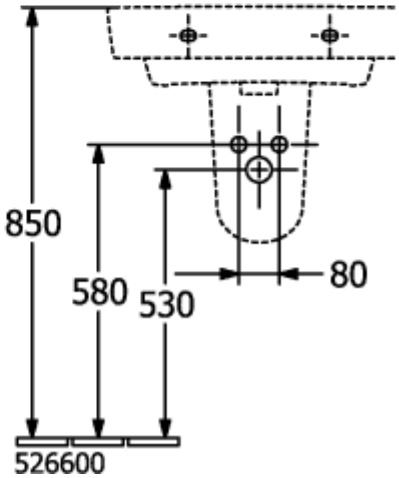


**52660001**

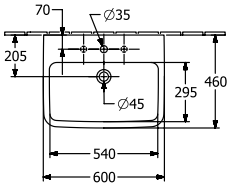


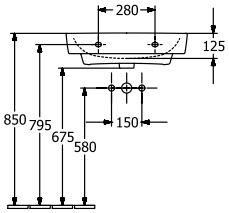


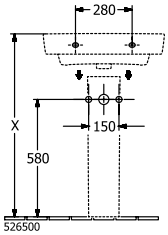


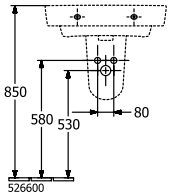

**52660001**

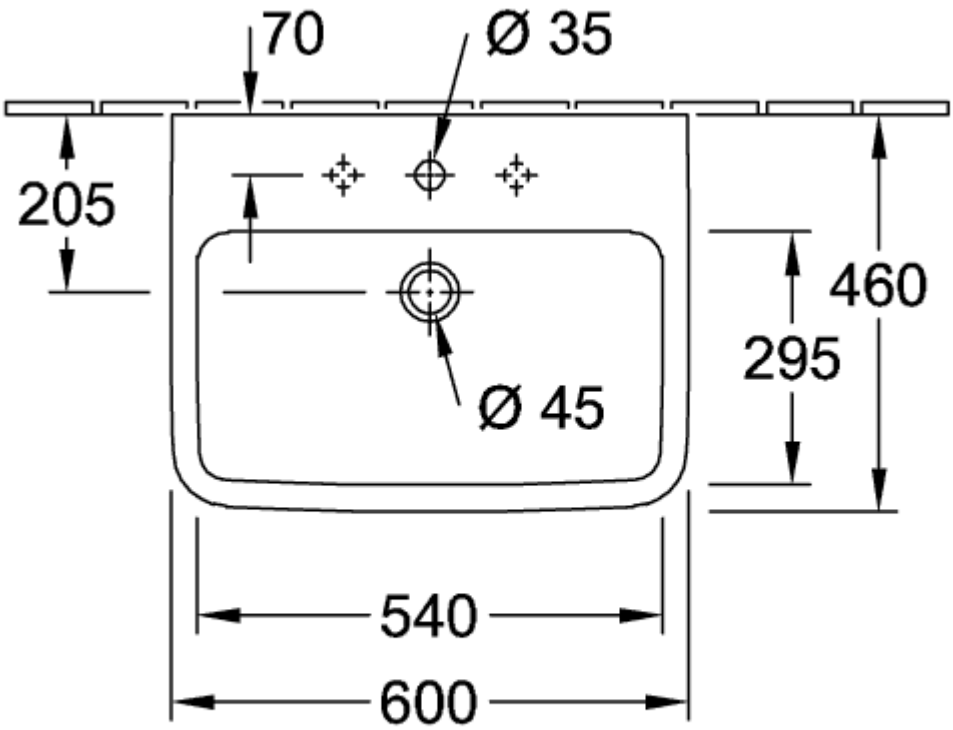
70
Ø 35
205
460
295
Ø 45
540
600

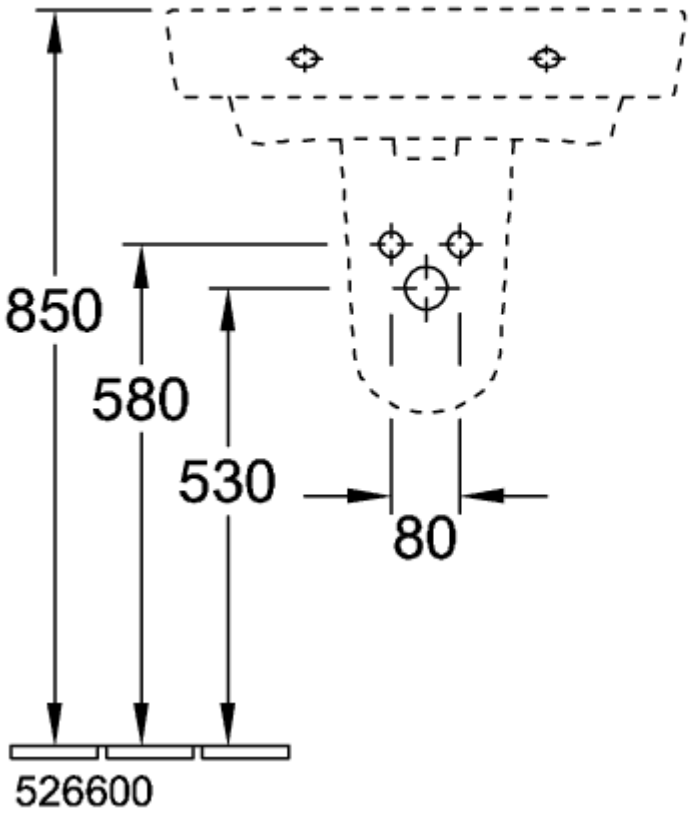
850
580
530
80
526600

## 52660001

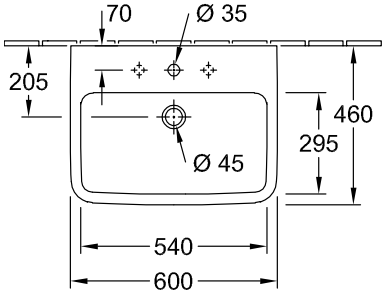


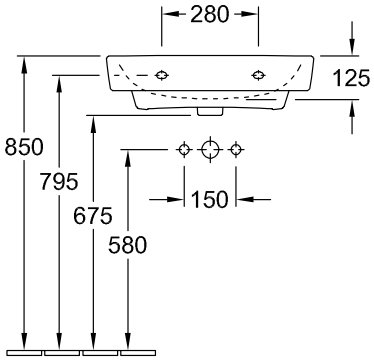


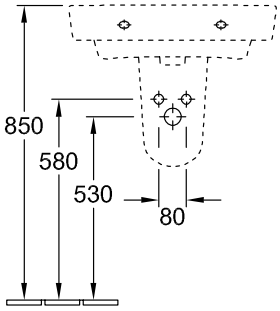


526600

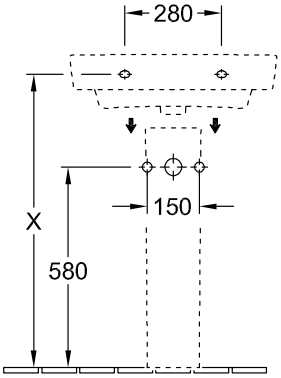


526500

## 52660001

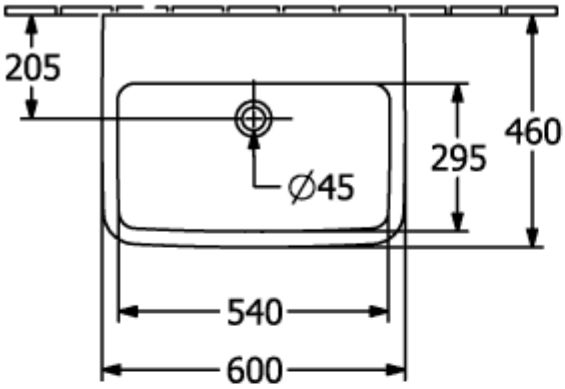


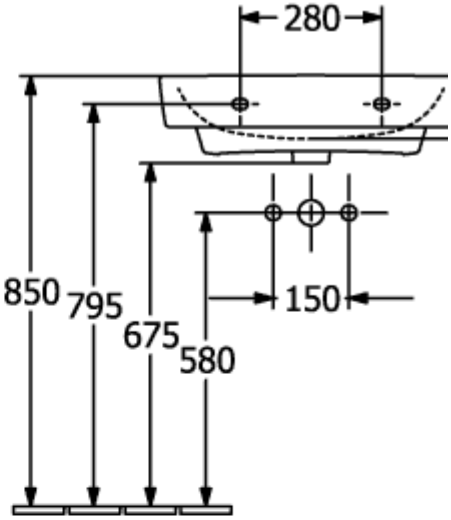


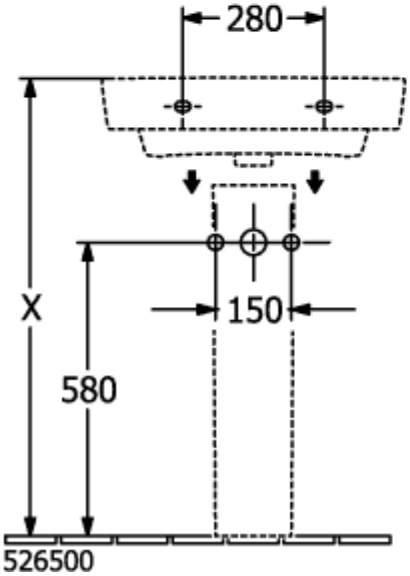


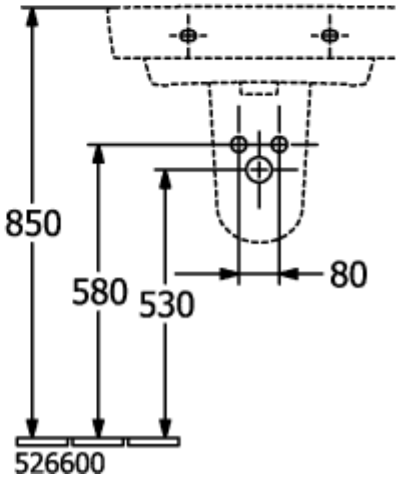


## 52660001

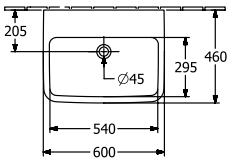


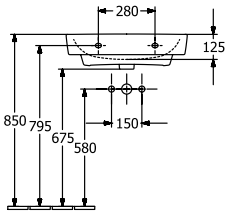


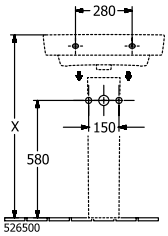


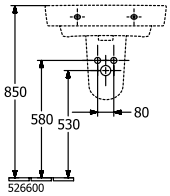

**52660001**

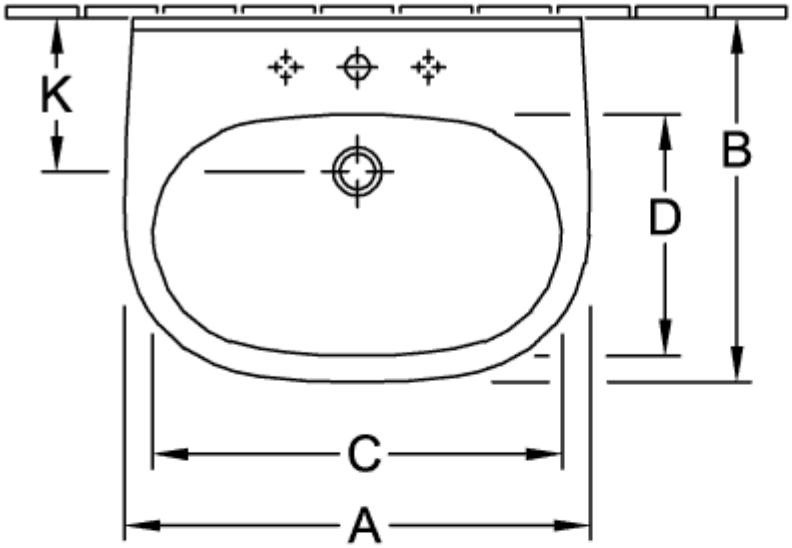


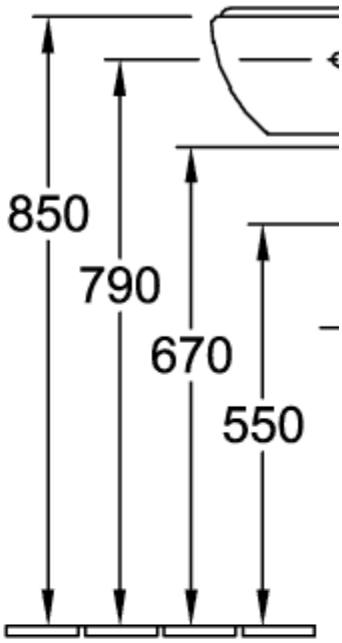


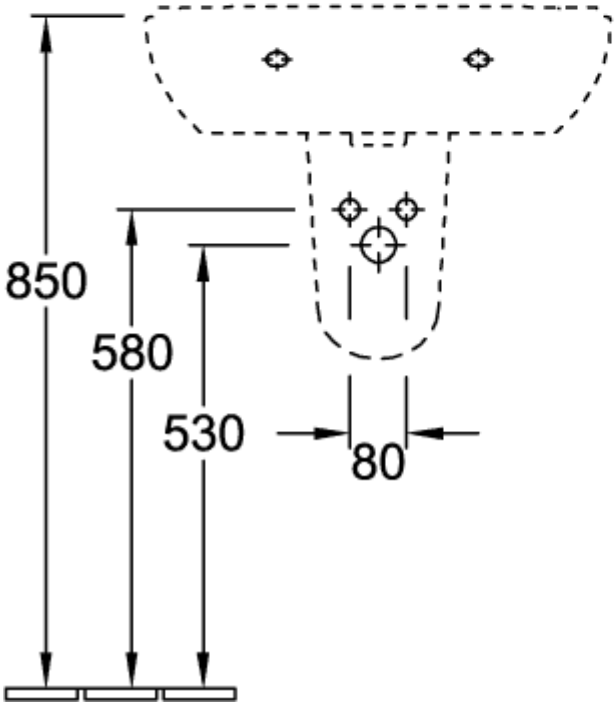


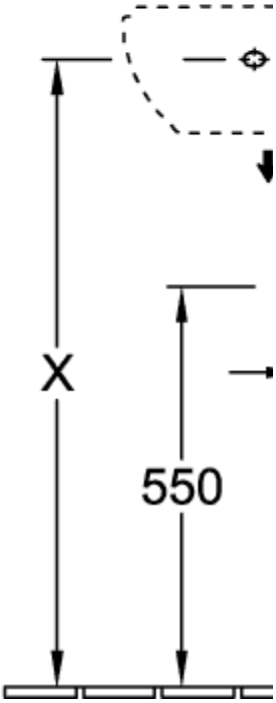

## 52660001

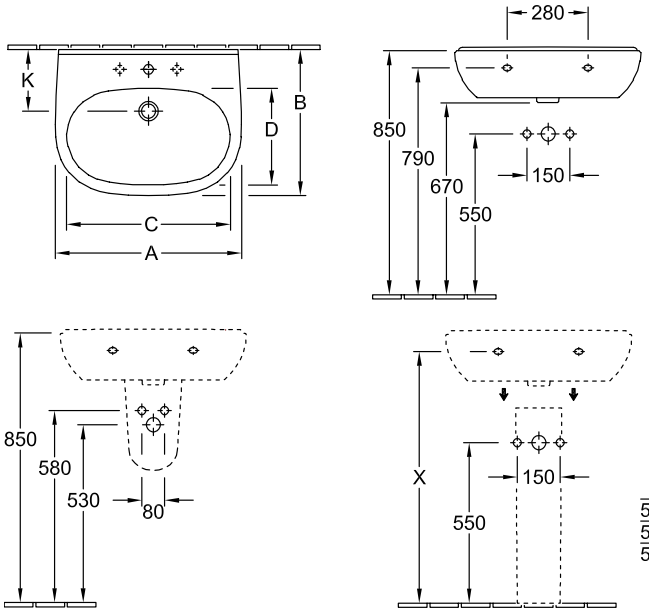


| | A | B | C | D |
|---|---|---|---|---|
| 5160 55 | 550 | 450 | 475 | 280 |
| 5160 60 | 600 | 490 | 525 | 315 |
| 5160 65 | 650 | 510 | 565 | 330 |

**52660001**

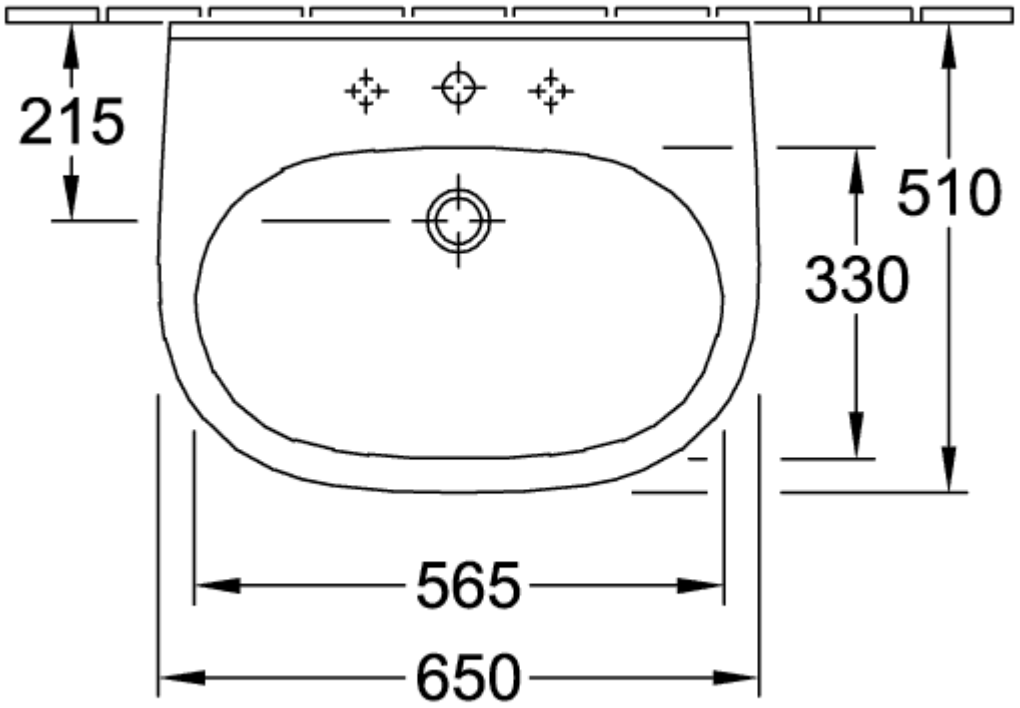


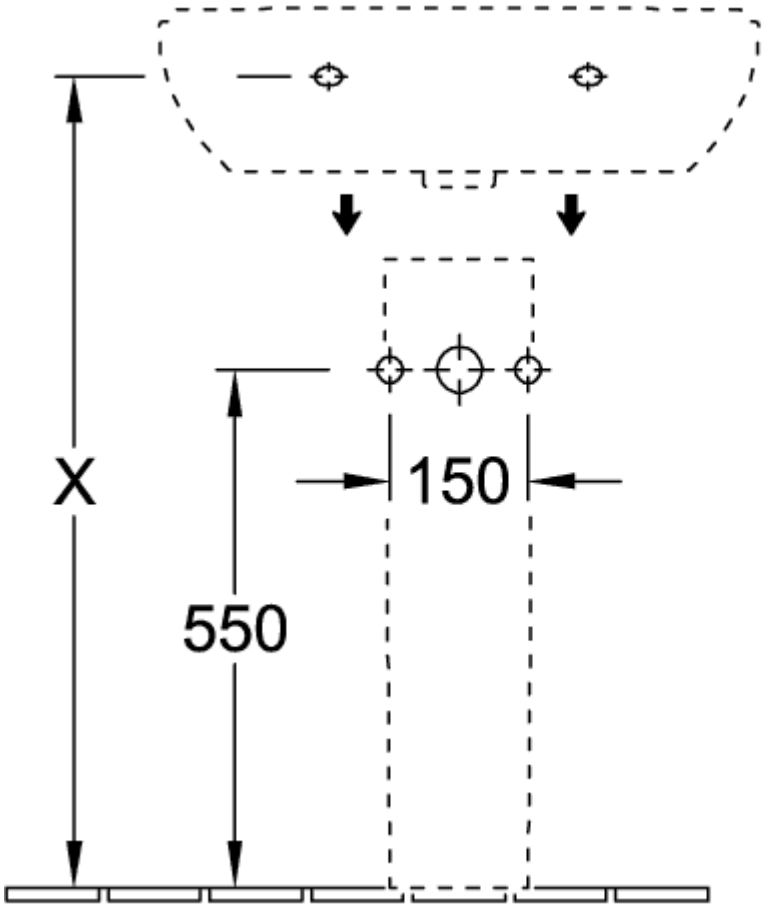


5265 00

## 52660001

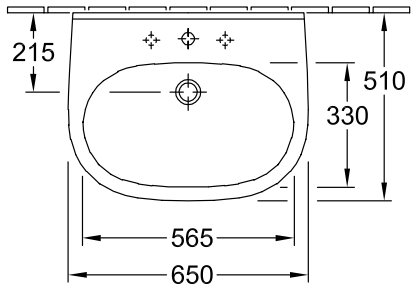


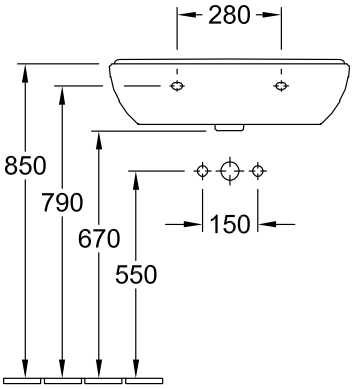


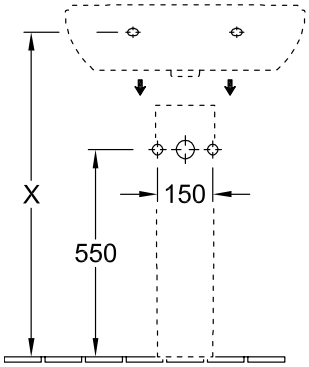


5265 00

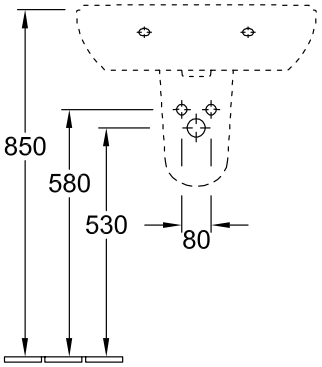


5266 00

**52660001**

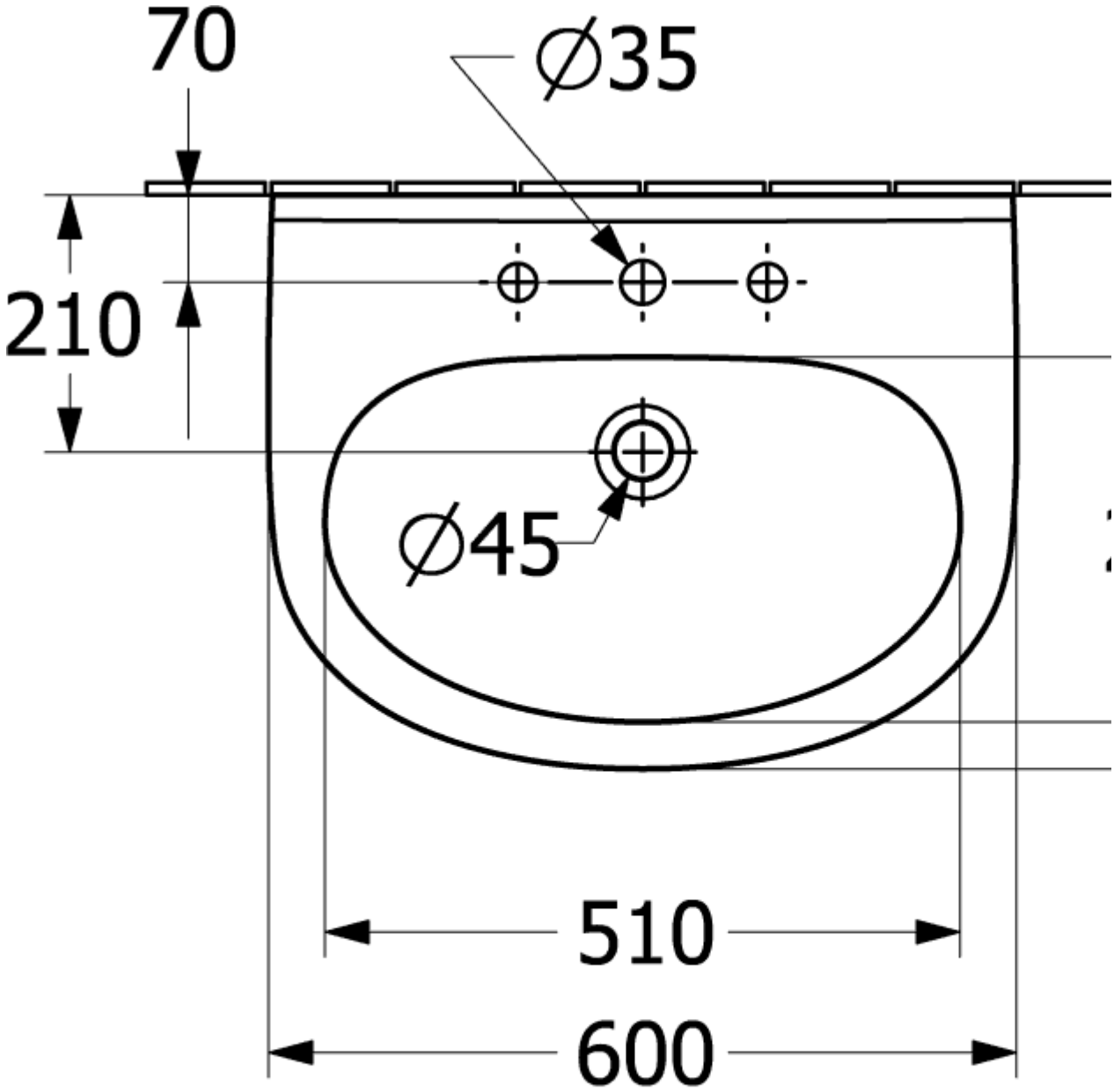
70
∅35
210
∅45
510
600

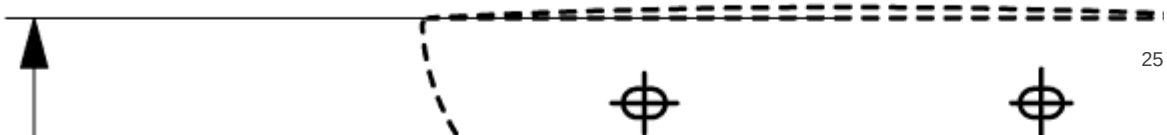

**52660001**

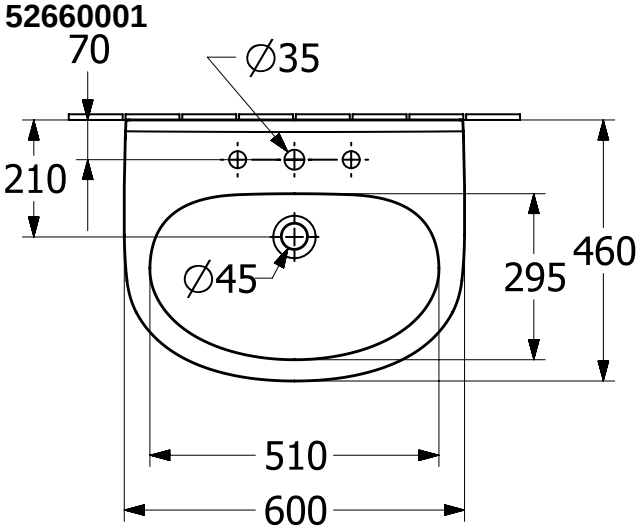
70
∅35
210
460
295
∅45
510
600

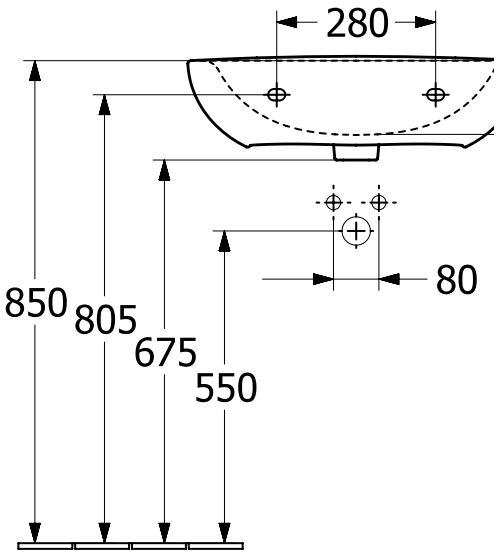
280
850
805
675
550
80

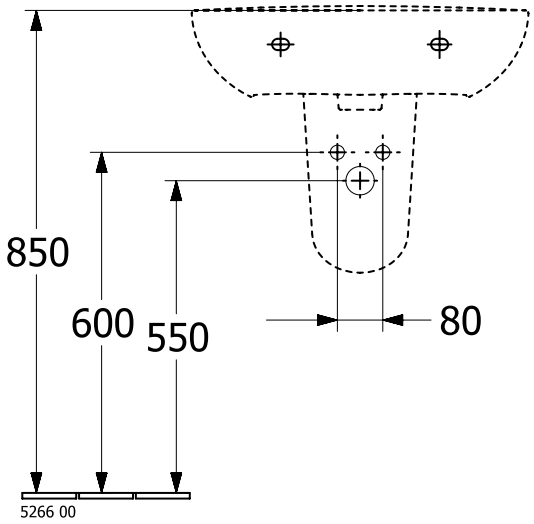
850
600
550
80
5266 00

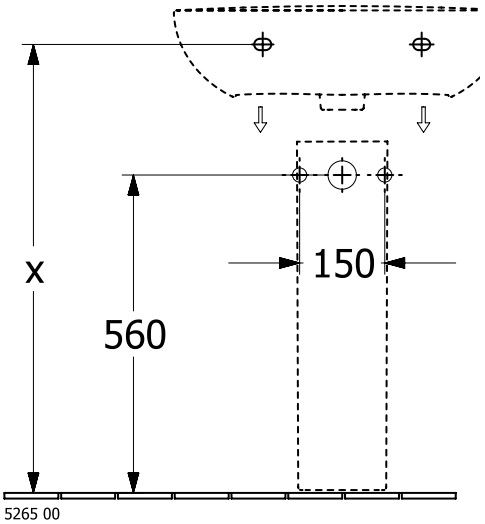
x
560
150
5265 00

**52660001**

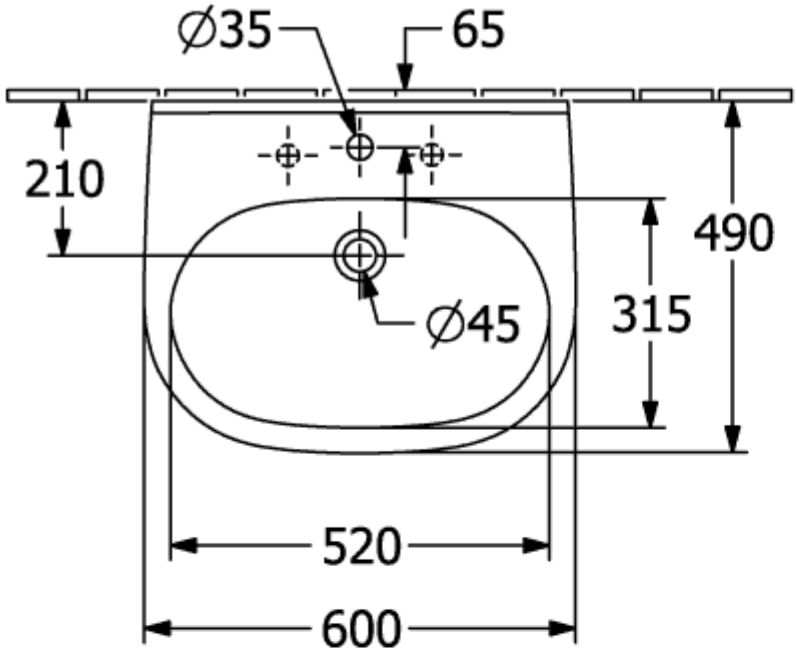


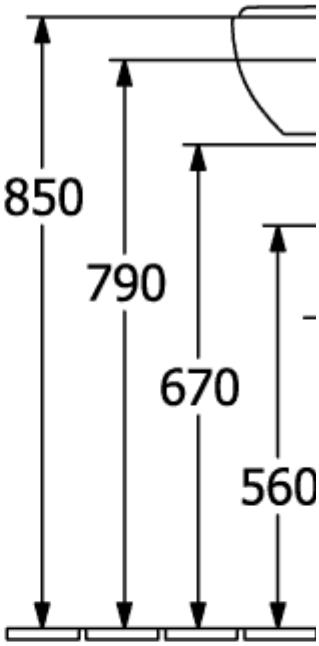


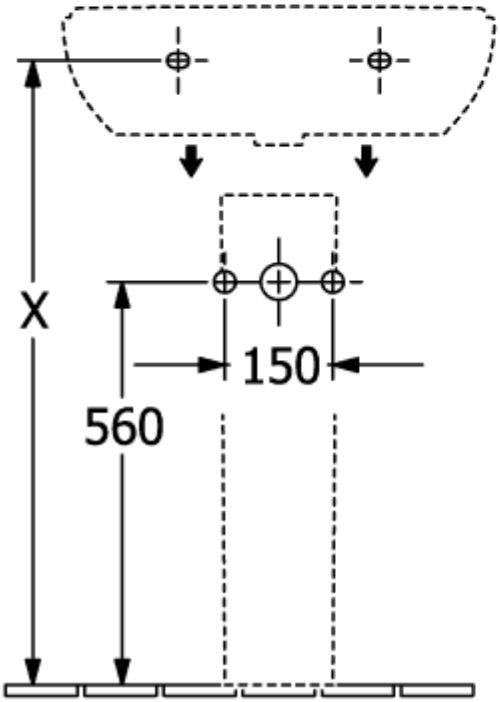


5265 00

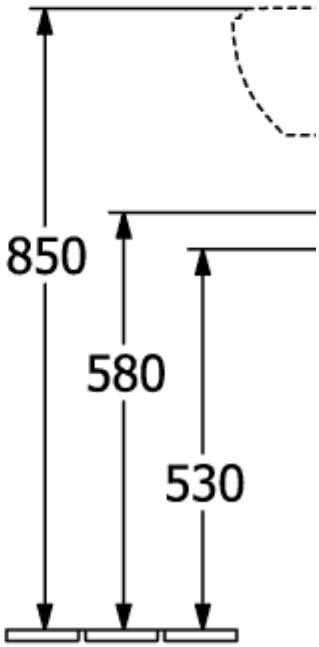


5266 00

## 52660001

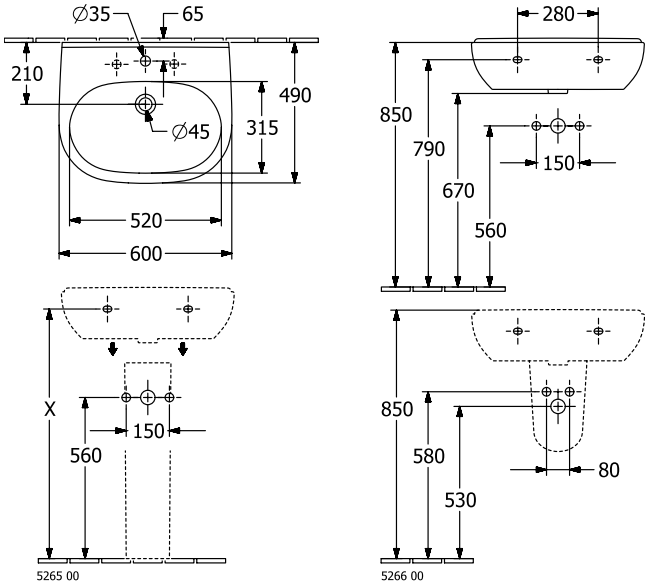


## 52660001

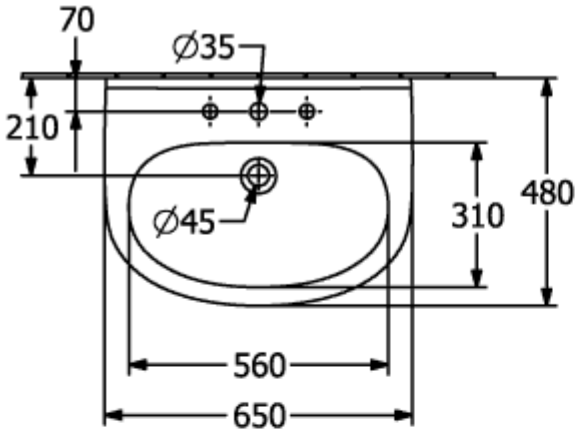


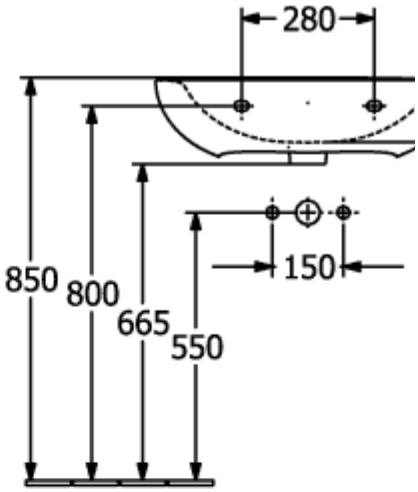


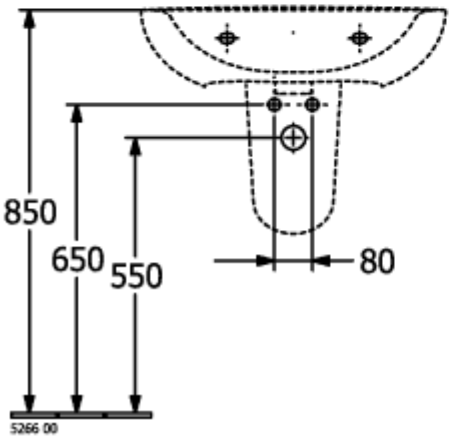


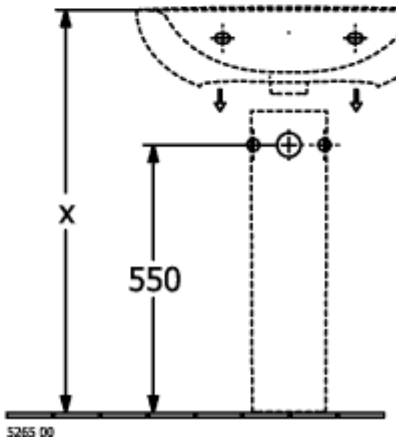

## 52660001

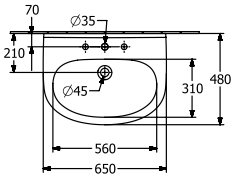
70
∅35
210
∅45
310
480
560
650

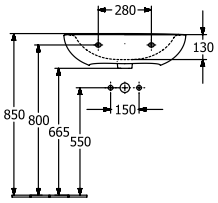
280
130
850
800
665
550
150

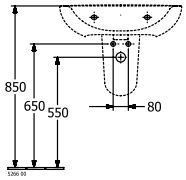
850
650
550
80

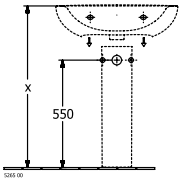
x
550

**52660001**

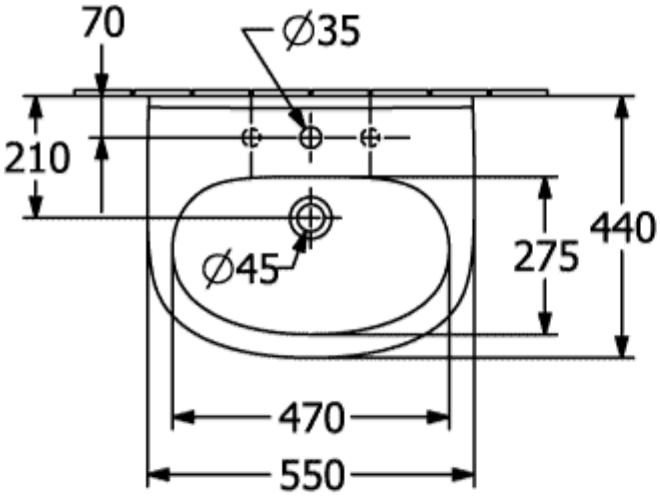
70
Ø35
210
440
275
Ø45
470
550

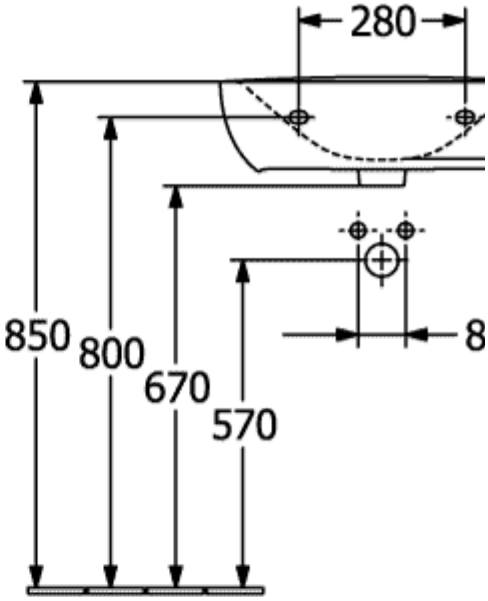
280
850
800
670
570
8

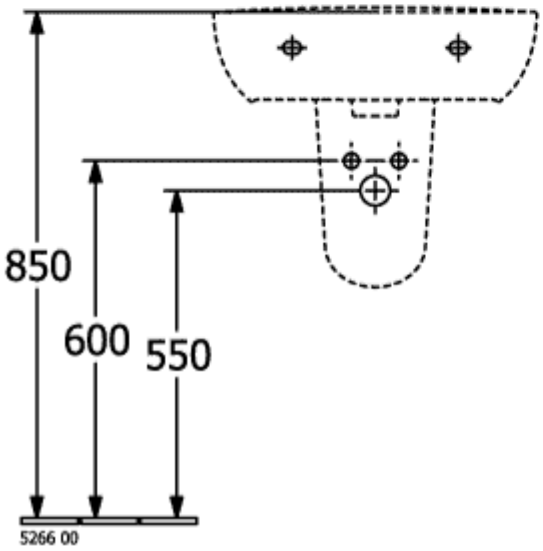
850
600
550
5266 00

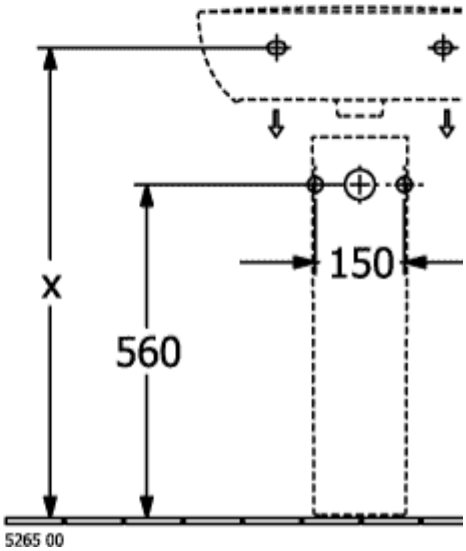
x
560
150
5265 00

## 52660001

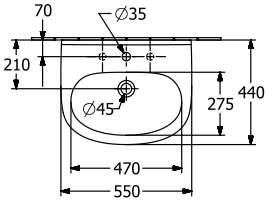
70
∅35
210
440
275
∅45
470
550

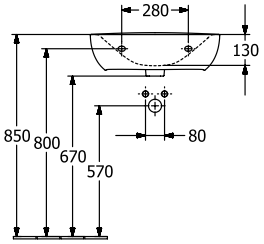
280
130
850
800
670
570
80

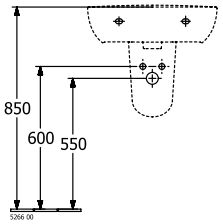
850
600
550
5266 00

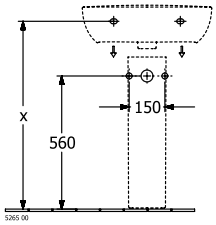
x
560
150
5265 00