# O.NOVO PEDESTAL

## PRODUCT INFORMATION

| | |
|---|---|
| Article title | Villeroy & Boch O.novo Pedestal, 165 x 140 x 690 mm, White Alpin |
| Article number | 52650001 |
| Scope of delivery | 1 x pedestal |
| Depth in mm | 140 |
| Width in mm | 165 |
| Height in mm | 690 |
| Collection | O.novo |
| Material | Sanitary ceramics |
| Colour name | White Alpin |
| Colour designation | White Alpin |

## TECHNICAL DRAWINGS

**52650001**

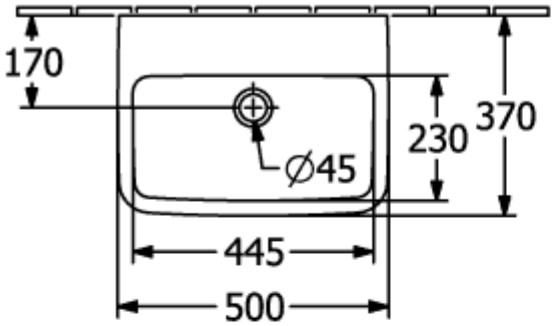


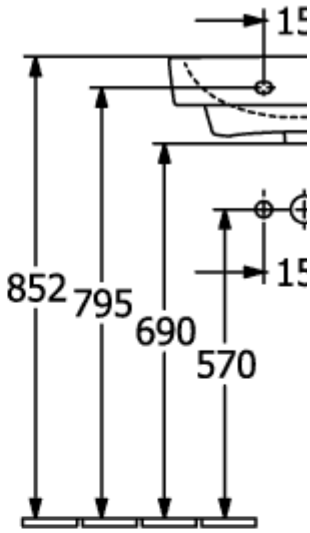


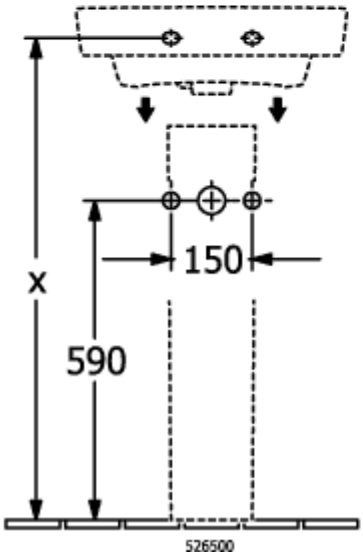


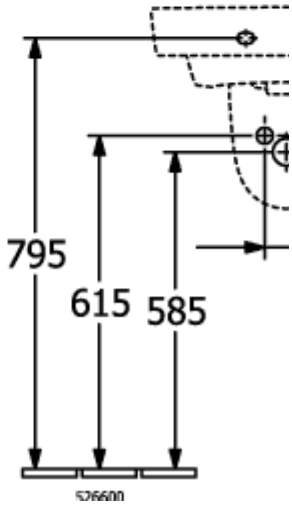

## 52650001

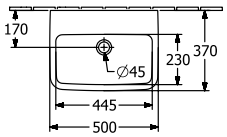


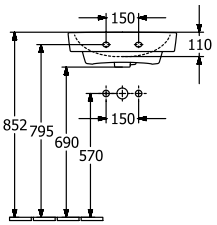


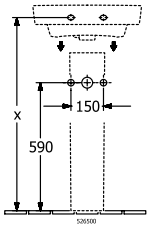


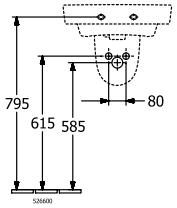


## 52650001

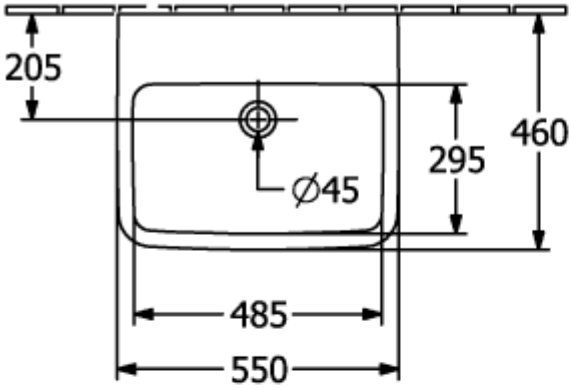


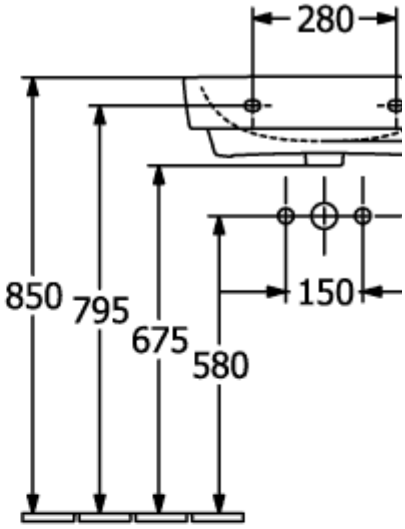


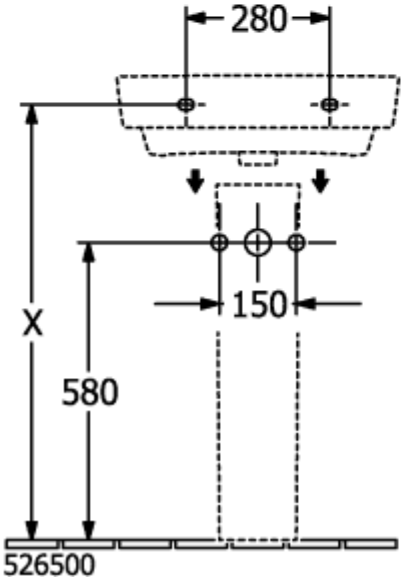


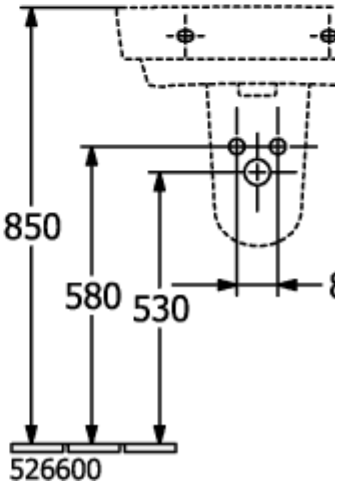

## 52650001

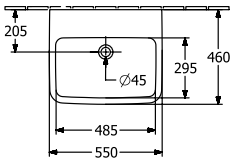


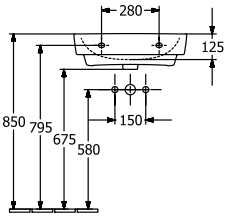


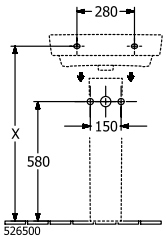


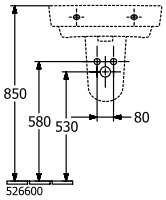


## 52650001

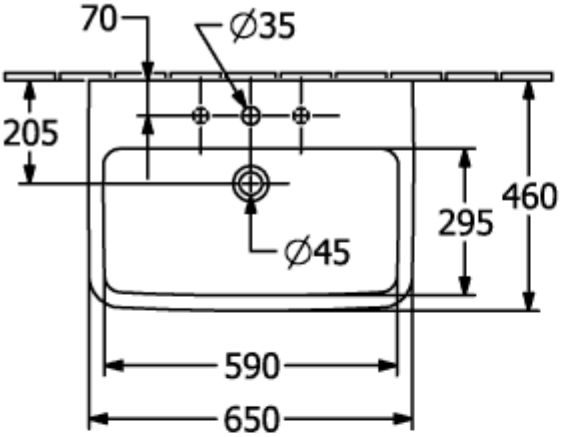


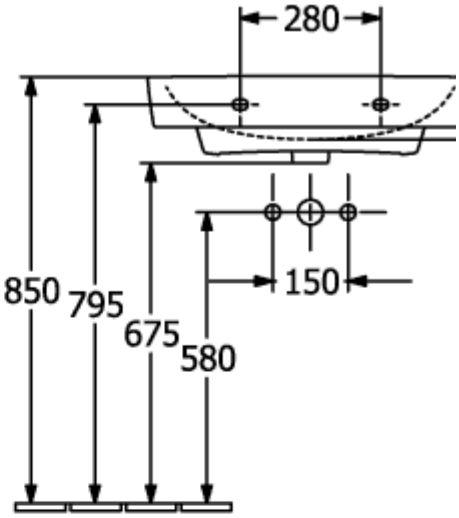


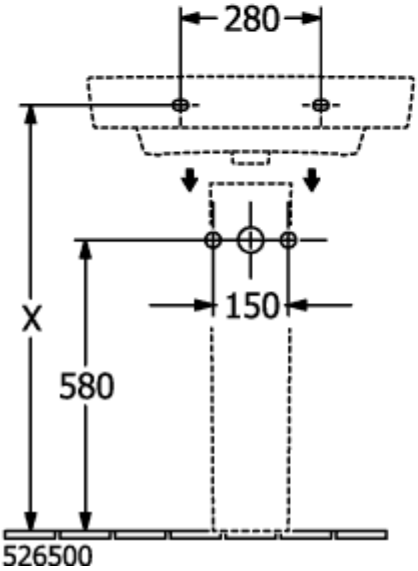


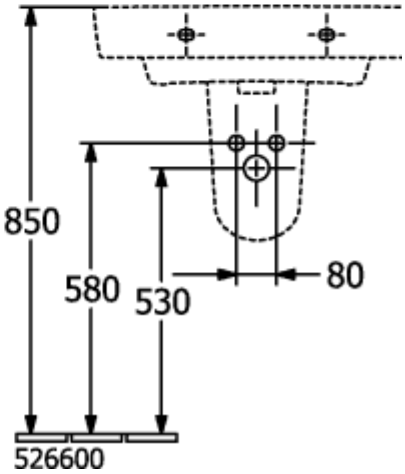

# 52650001

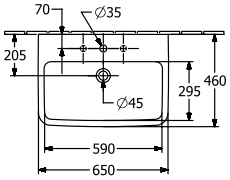
70
∅35
205
460
295
∅45
590
650

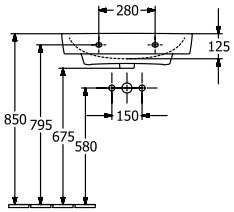
280
125
850
795
675
580
150

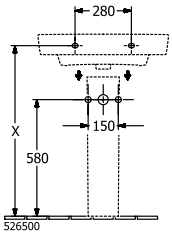
280
X
150
580
526500

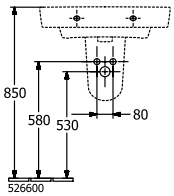
850
580
530
80
526600

**52650001**

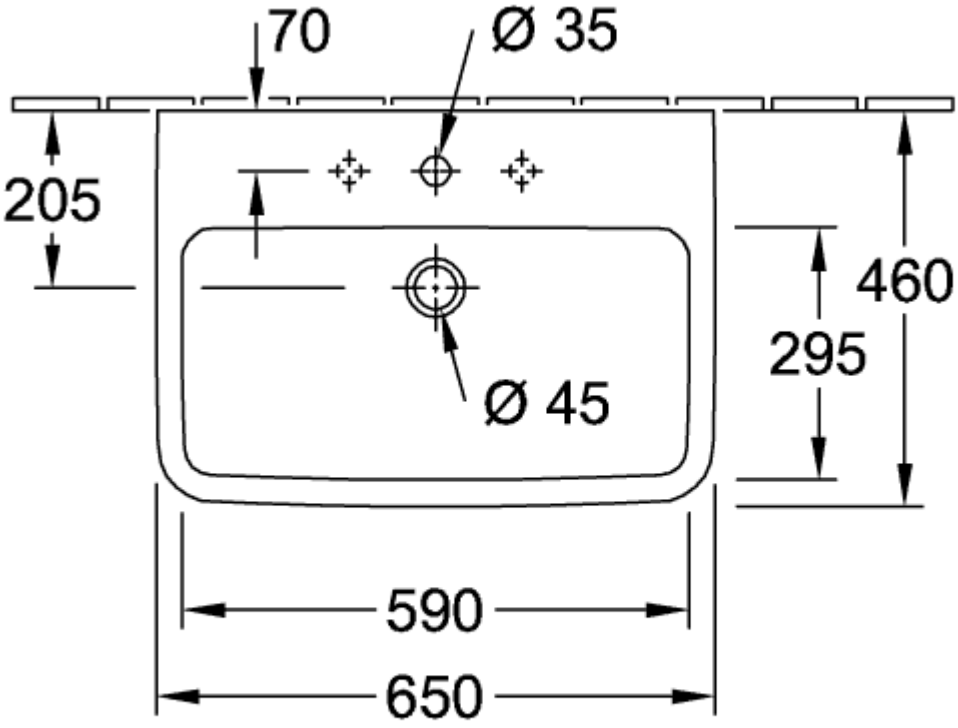
70
Ø 35
205
460
295
Ø 45
590
650

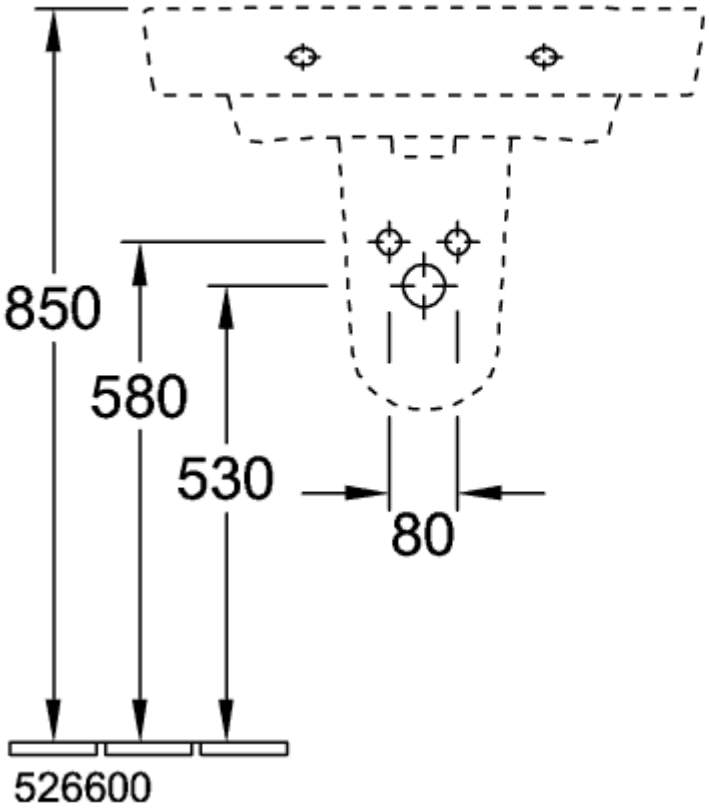
850
580
530
80
526600

## 52650001

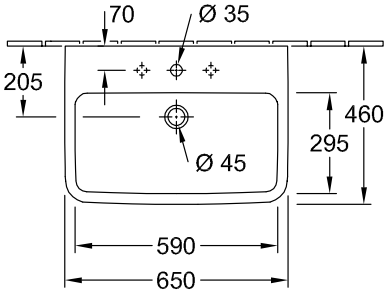
70
Ø 35
205
460
295
Ø 45
590
650

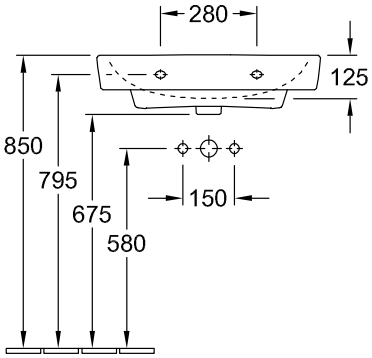
280
125
850
795
675
580
150

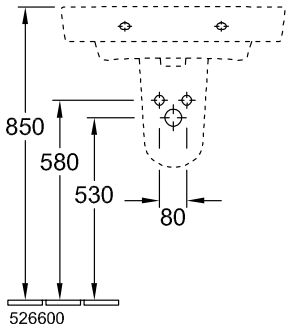
850
580
530
80
526600

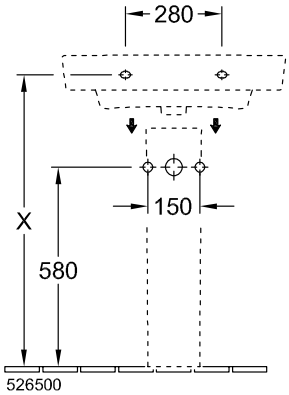
280
150
X
580
526500

**52650001**

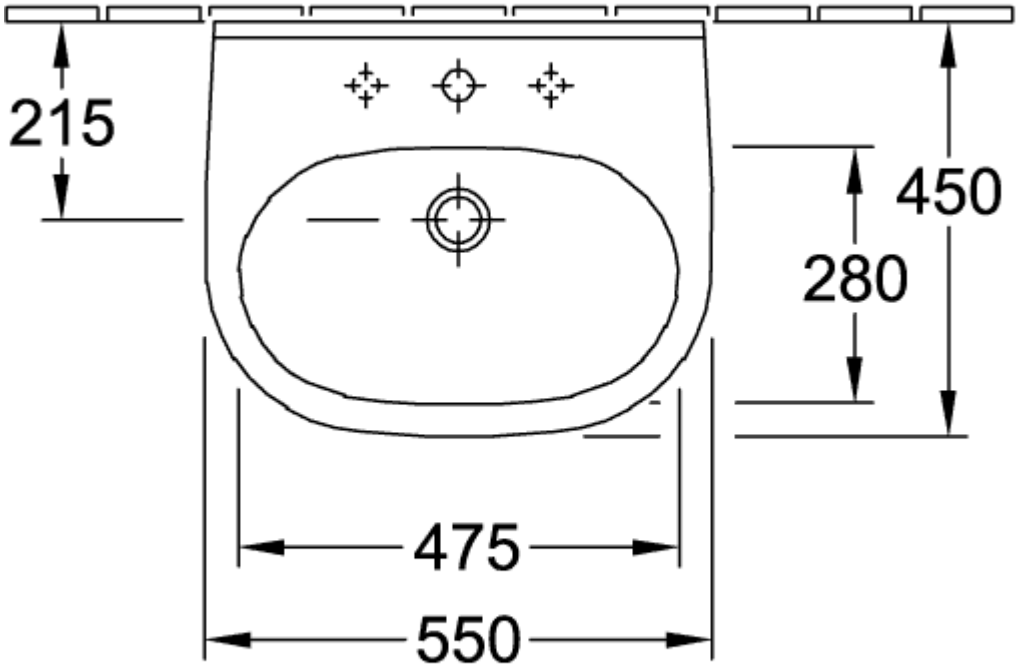


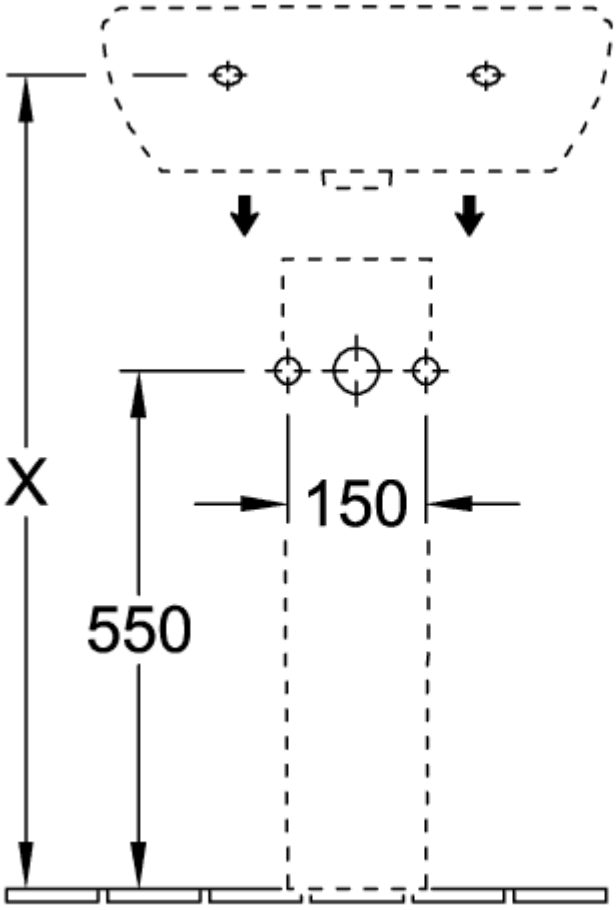


5265 00

## 52650001

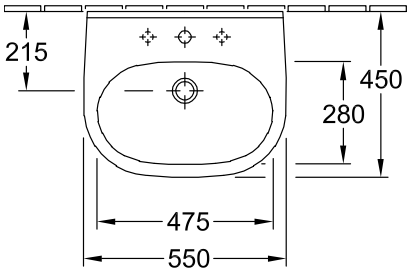


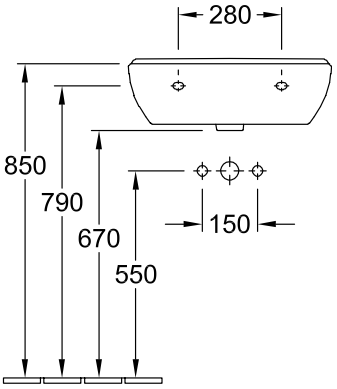


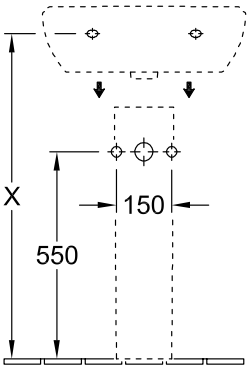


5265 00

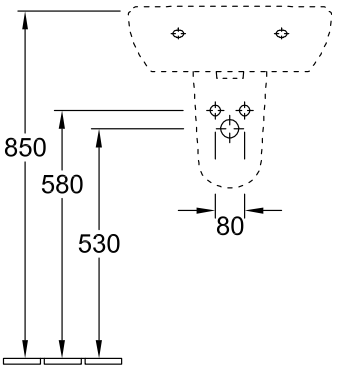


5266 00

**52650001**

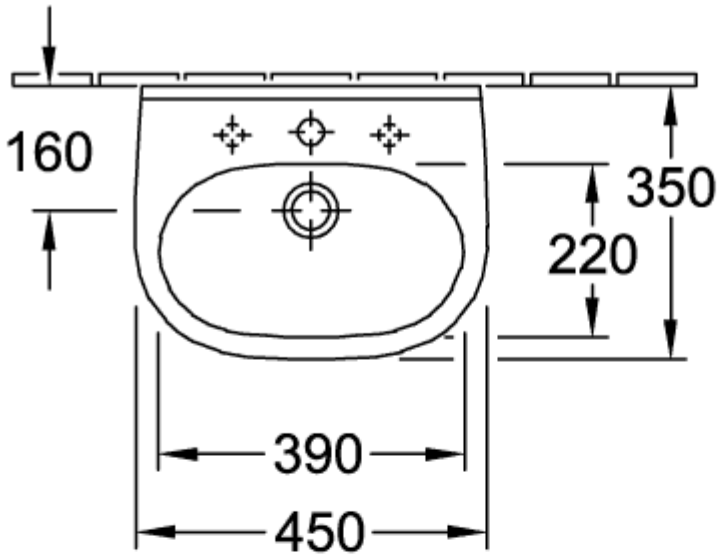


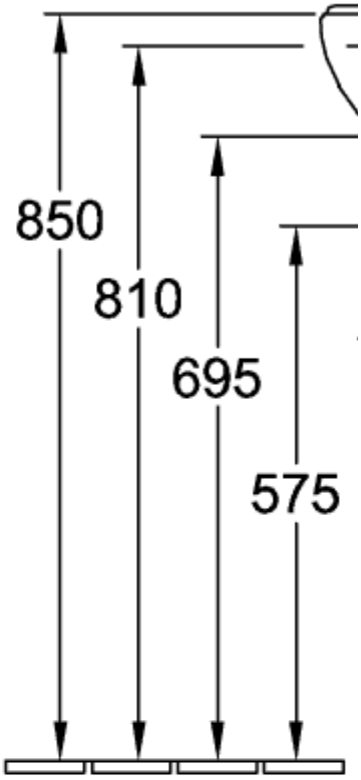


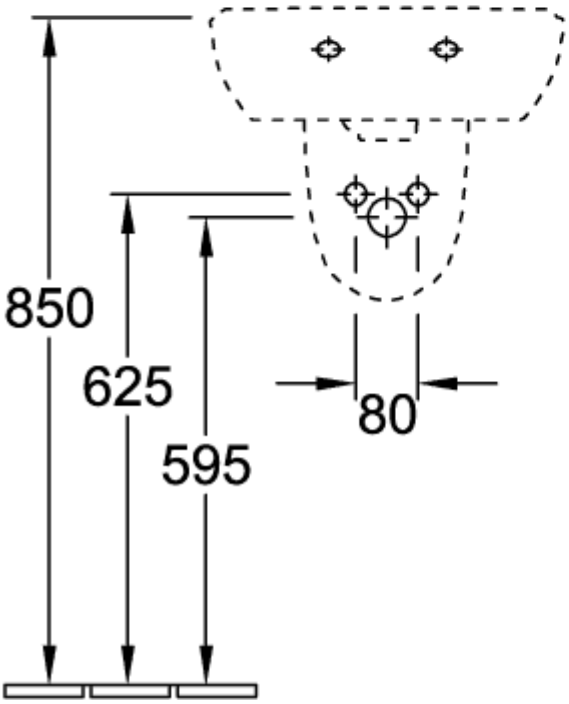

## 52650001

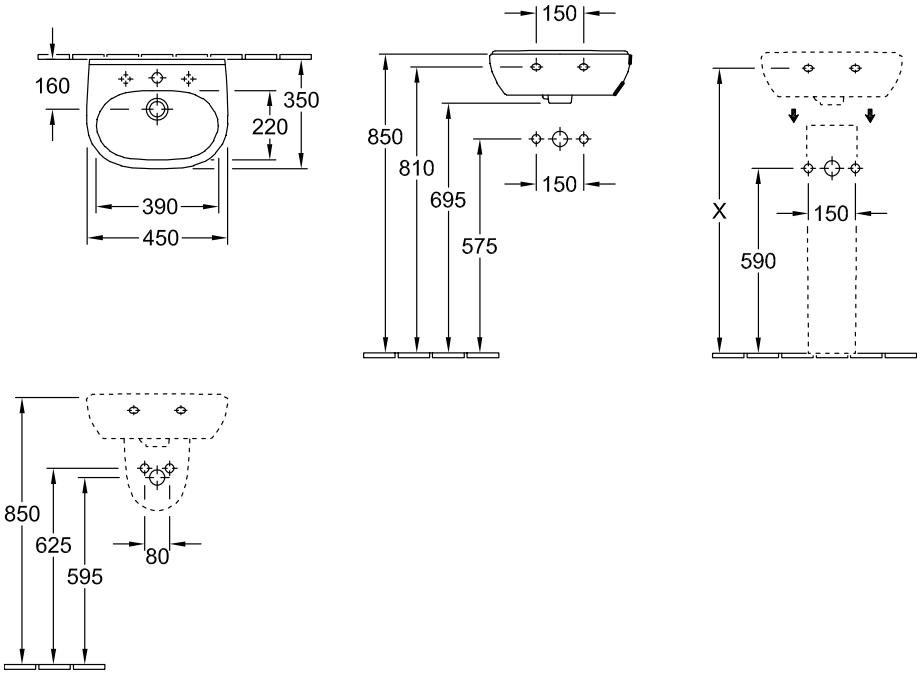
160
350
220
390
450
150
850
810
695
575
150
X
150
590
850
625
595
80

## 52650001

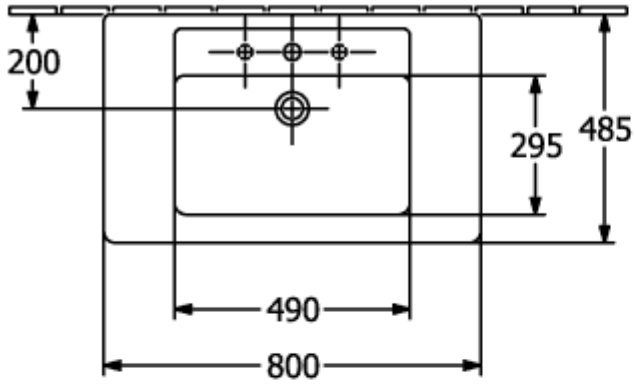


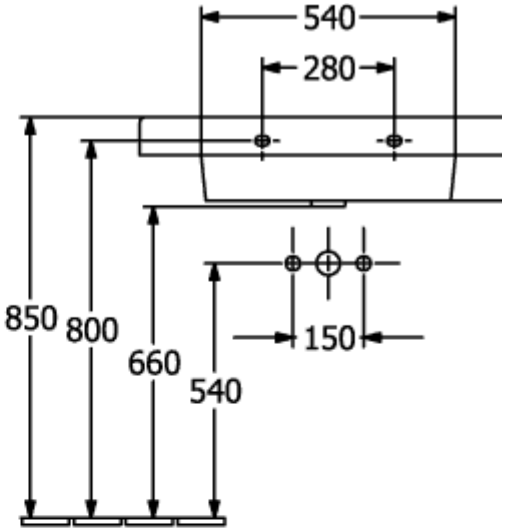


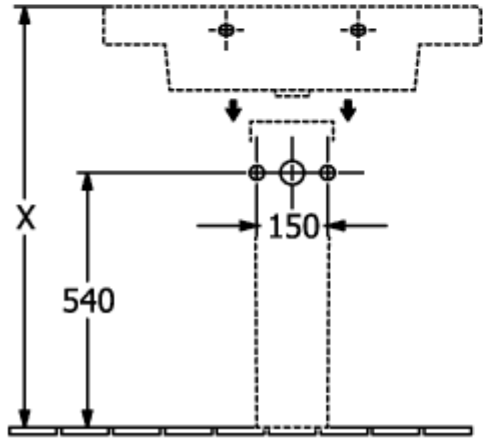


526500

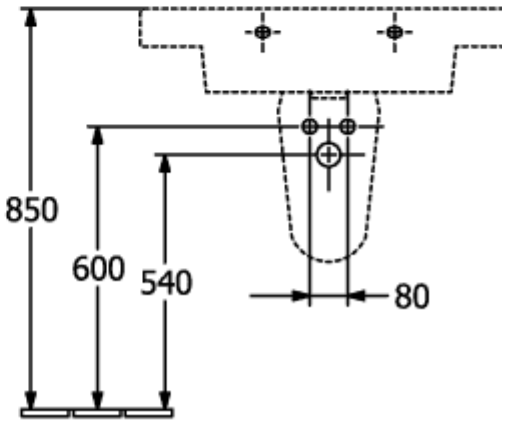


726400

## 52650001

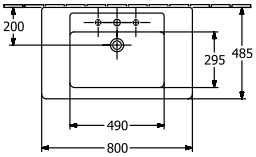


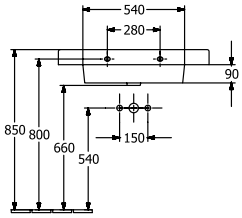


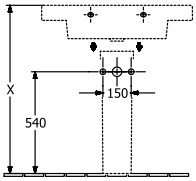


526500

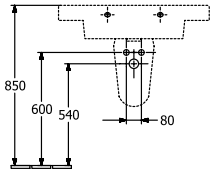


726400

**52650001**

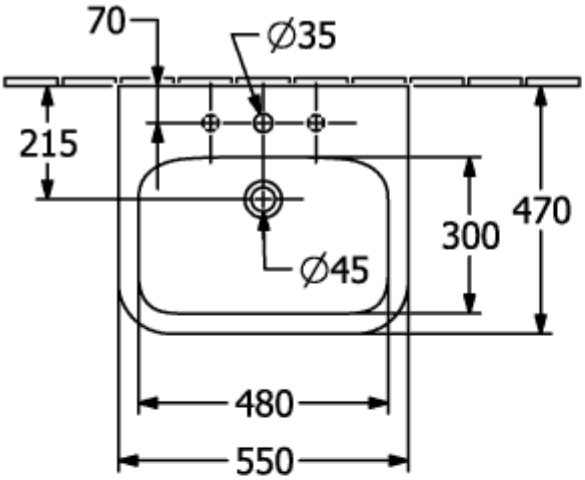


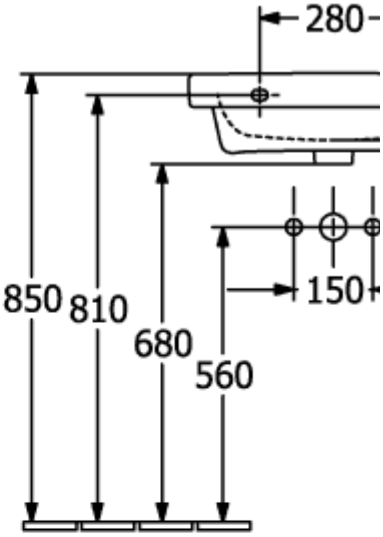


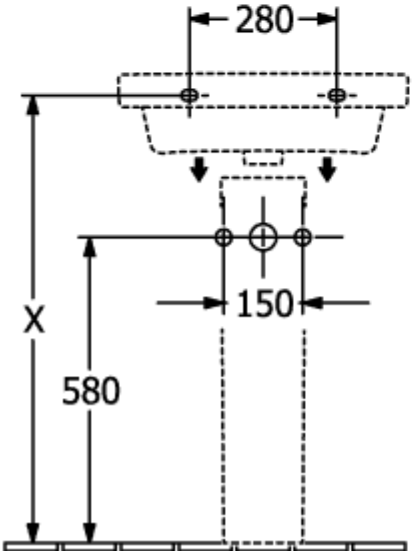


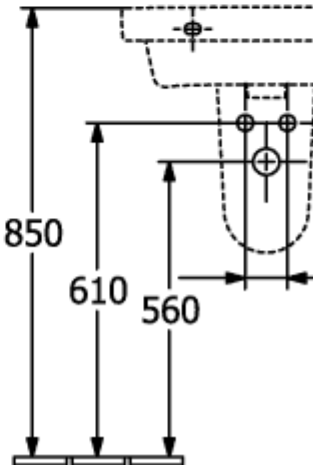


**52650001**

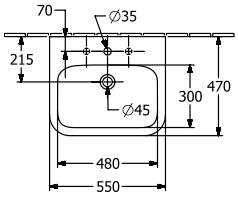


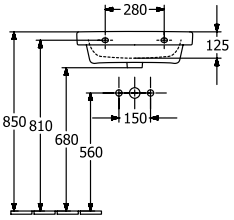


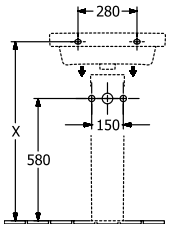


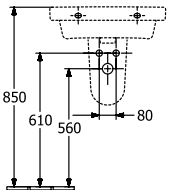

**52650001**

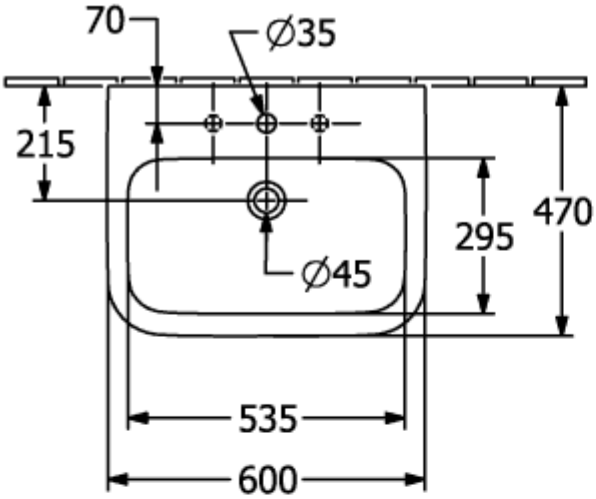


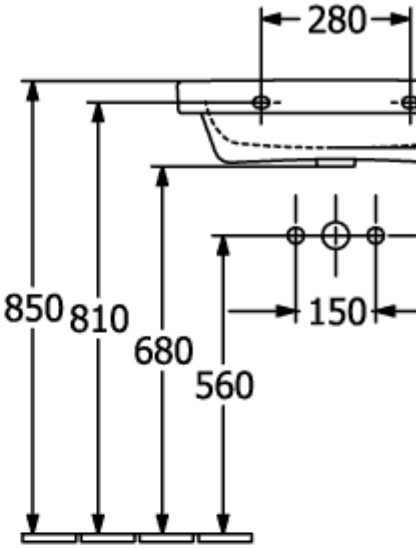


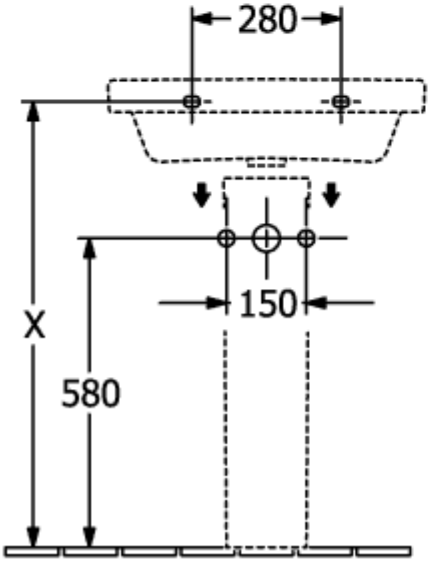


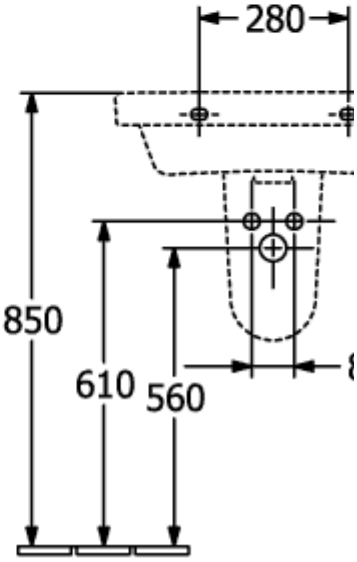


**52650001**

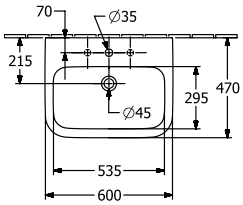


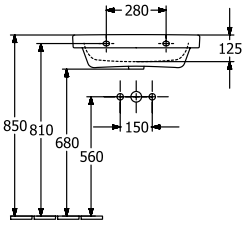


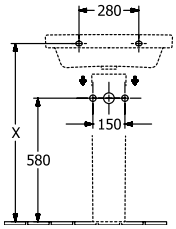


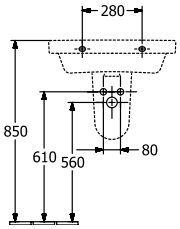

**52650001**

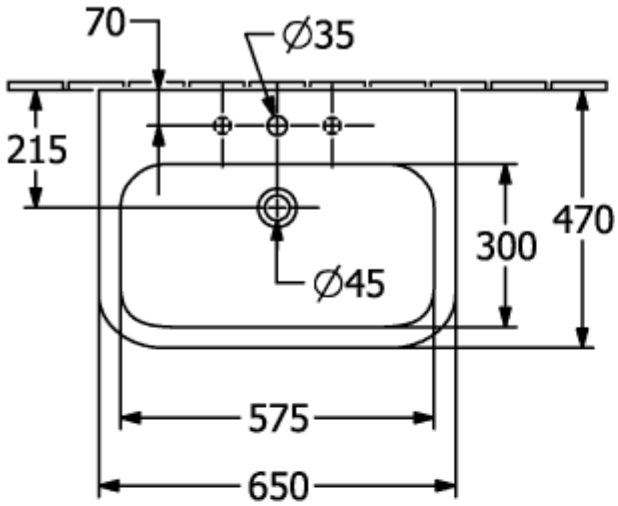


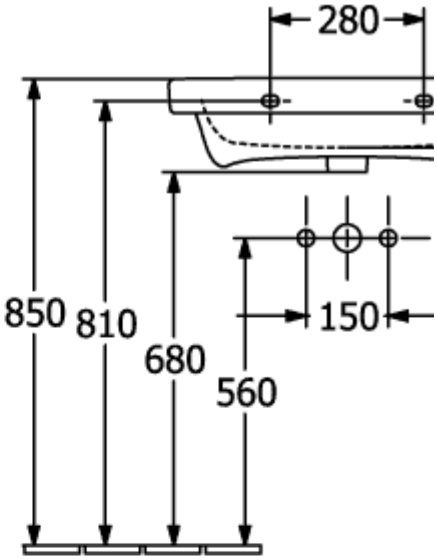


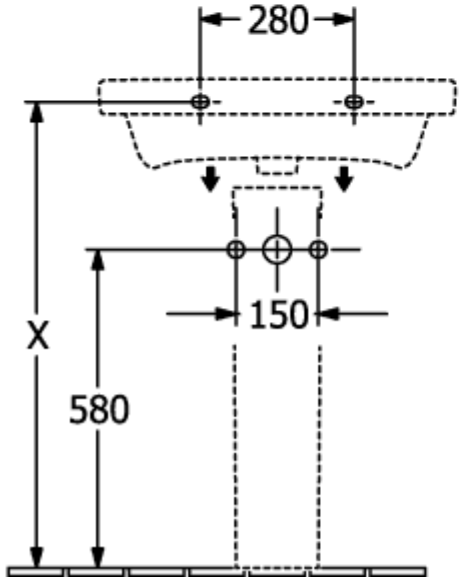


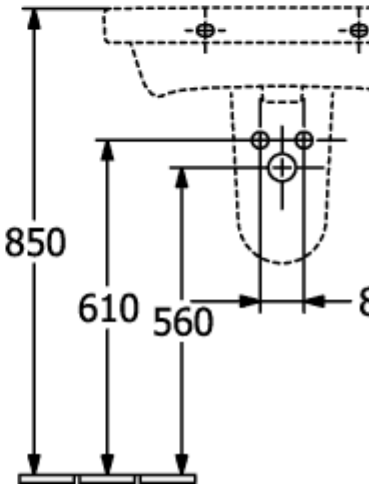


**52650001**

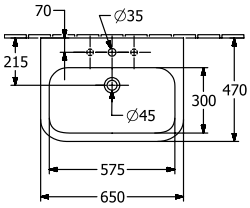


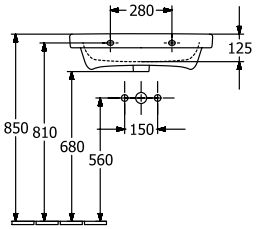


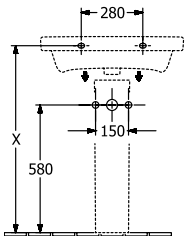


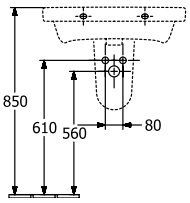

**52650001**

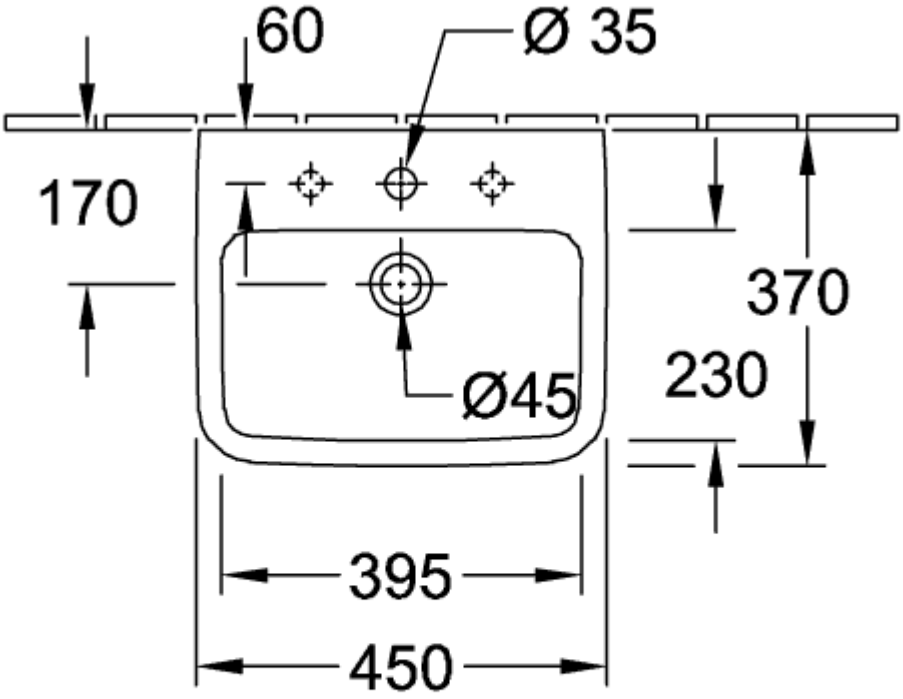
60
Ø 35
170
370
230
Ø45
395
450

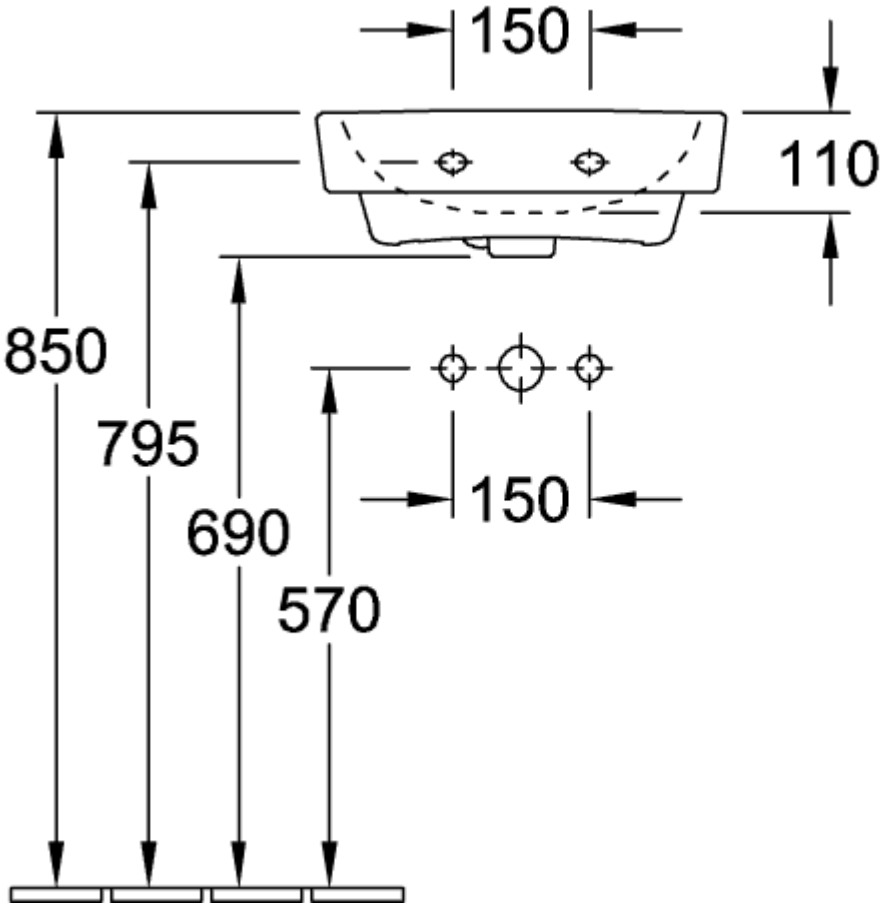
150
110
850
795
690
570
150

**52650001**

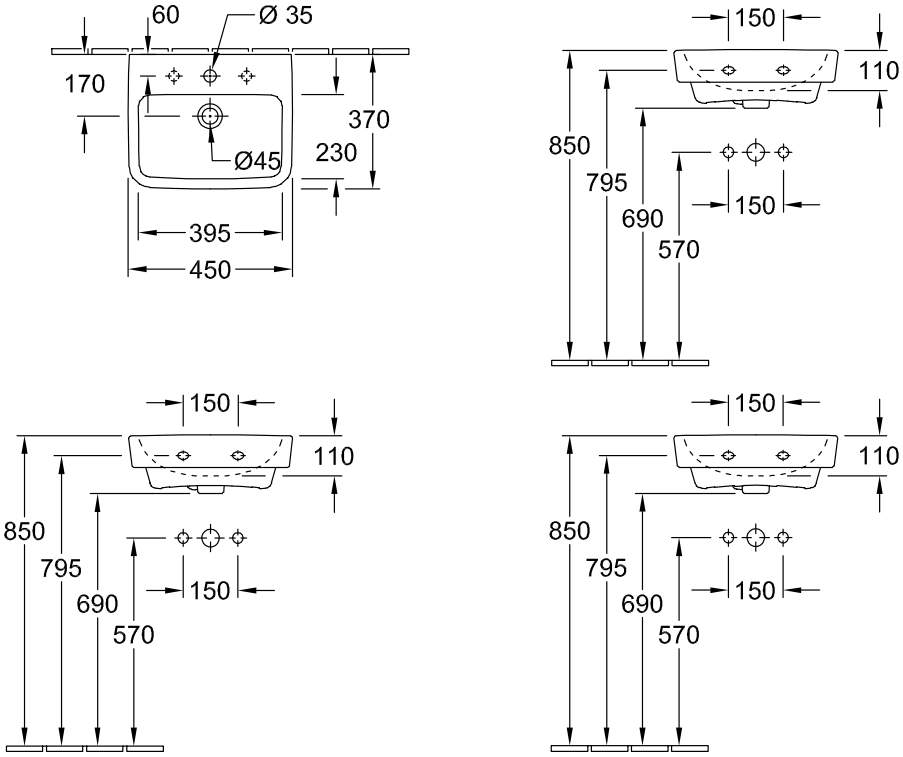
60
Ø 35
170
370
230
Ø45
395
450
150
110
850
795
690
570
150
150
110
850
795
690
570
150
150
110
850
795
690
570
150

**52650001**

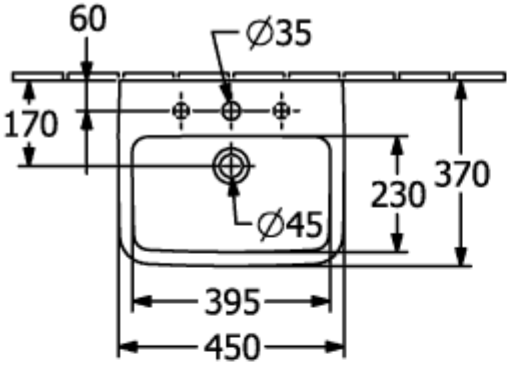


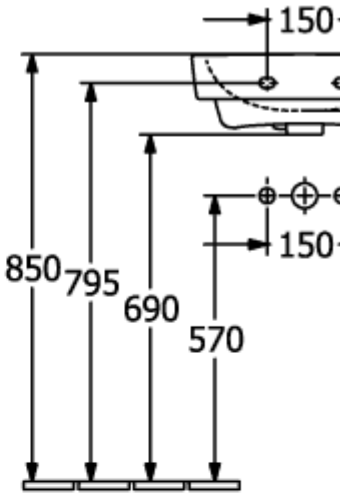


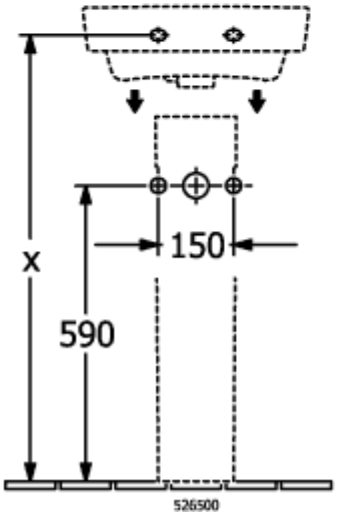


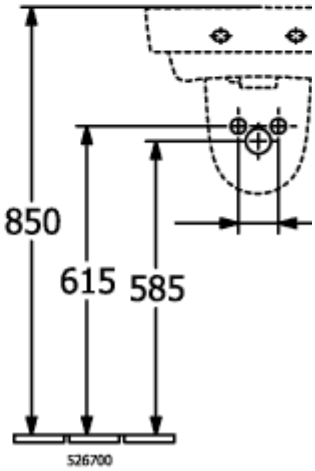


**52650001**

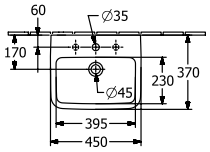


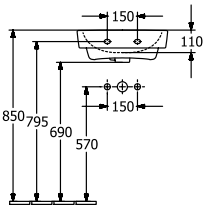


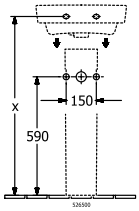


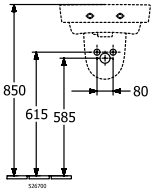

## 52650001

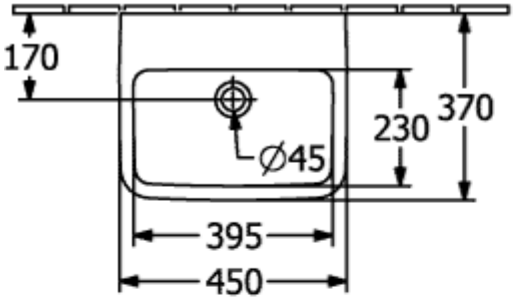


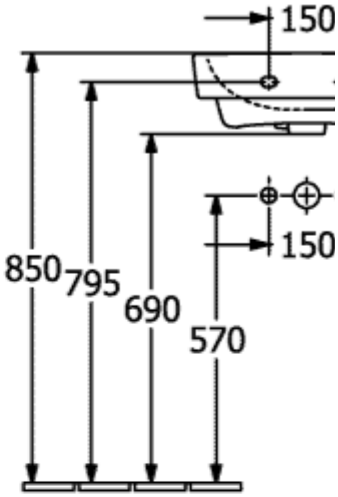


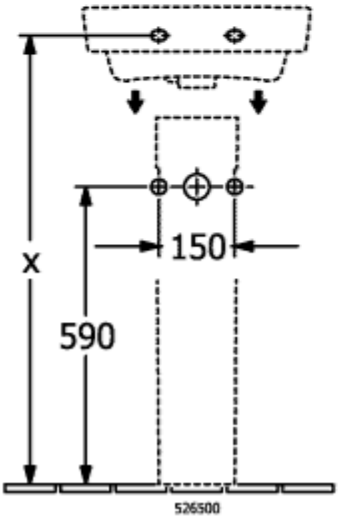


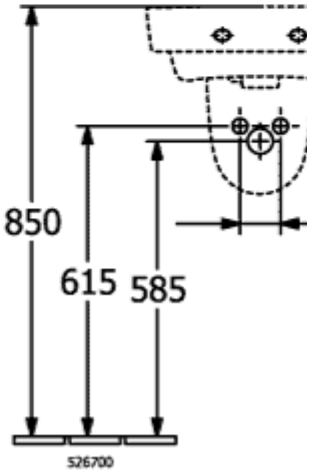


## 52650001

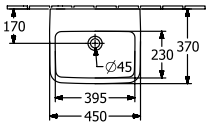


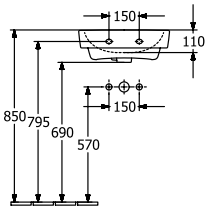


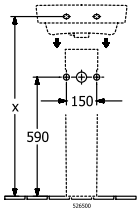


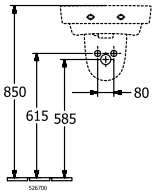

**52650001**

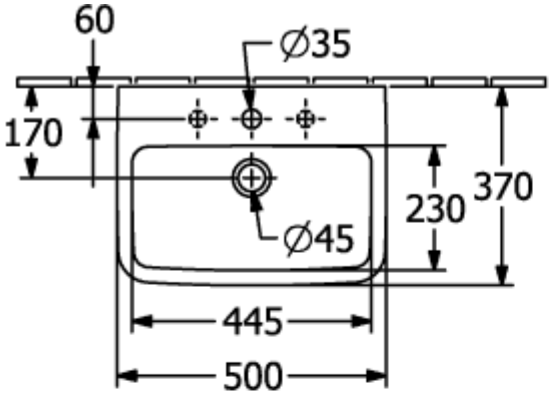


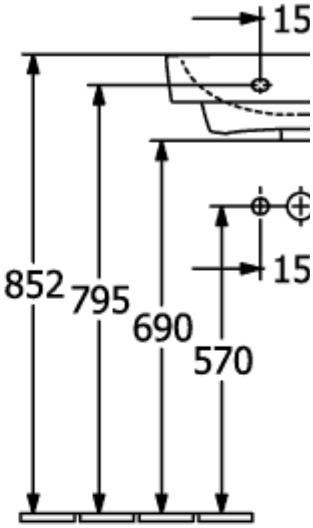


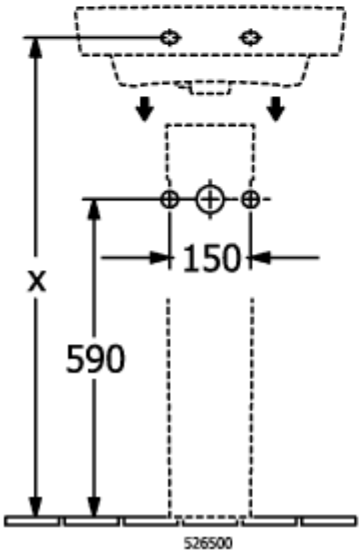


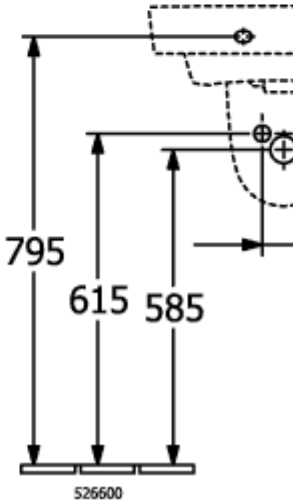


**52650001**

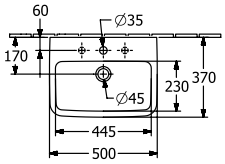


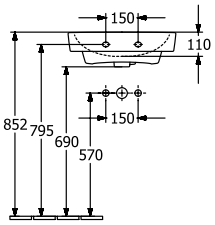


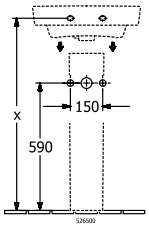


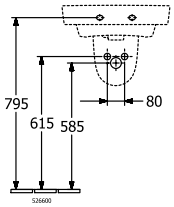

**52650001**

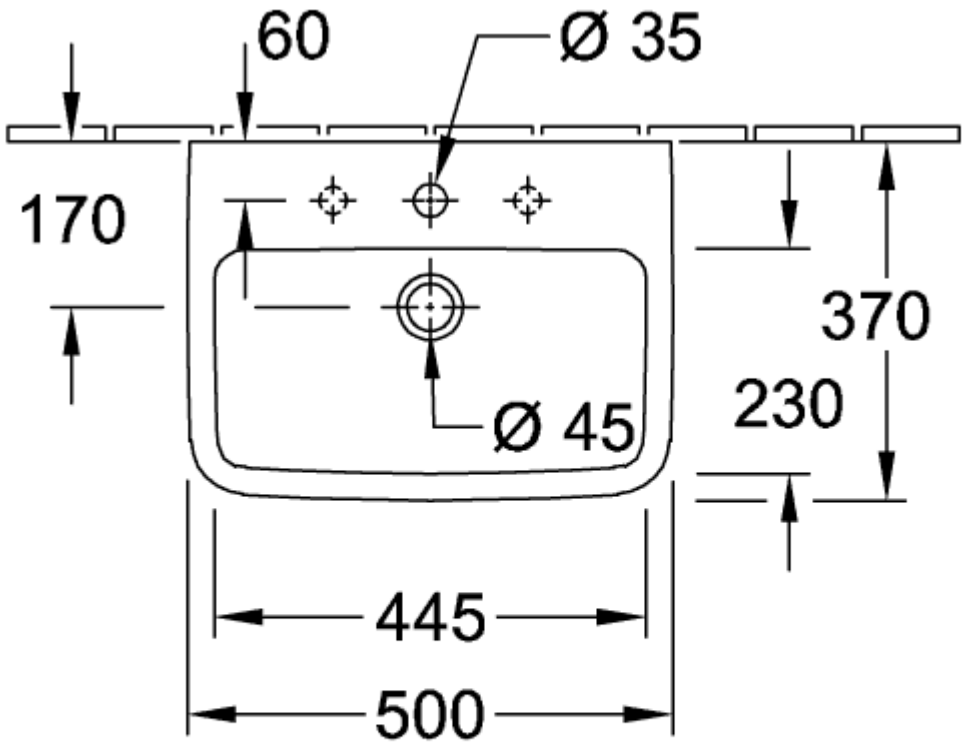
60
Ø 35
170
370
230
Ø 45
445
500

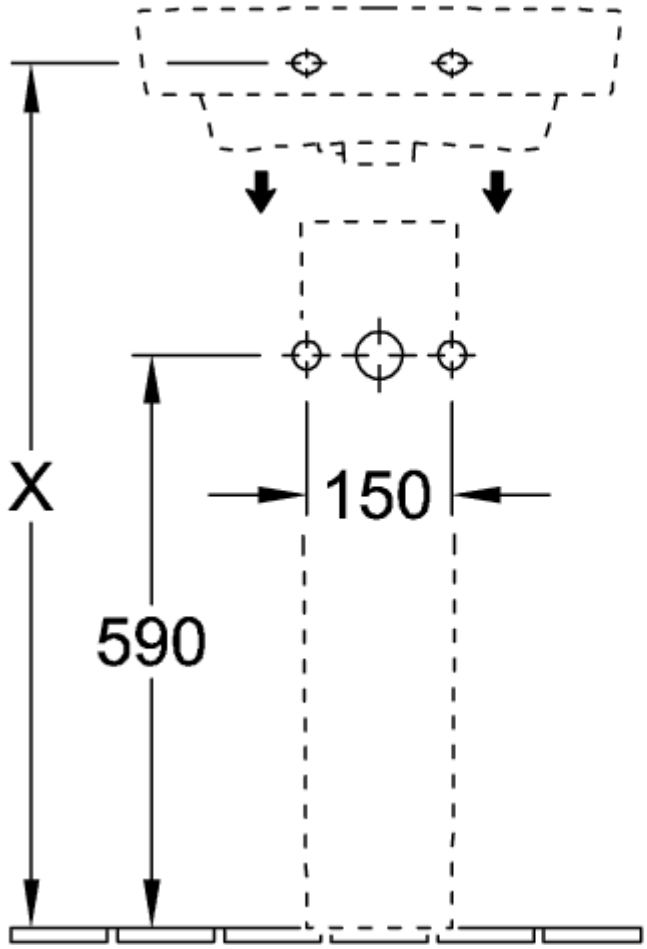
X
150
590

**52650001**

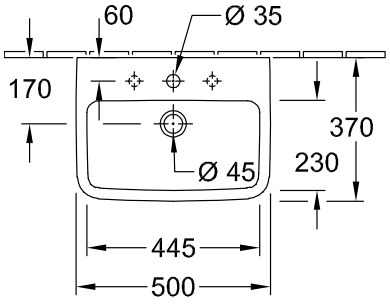
60
Ø 35
170
370
230
Ø 45
445
500

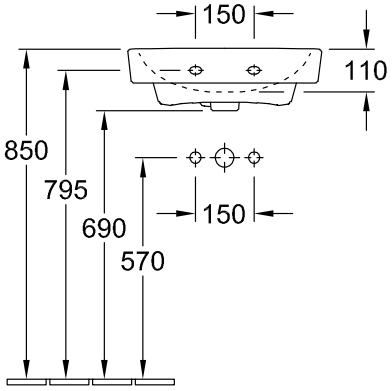
150
110
850
795
690
570
150

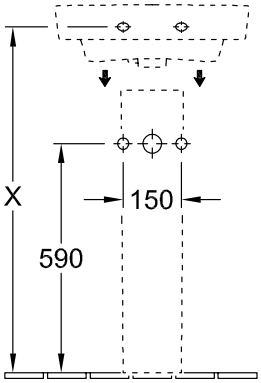
X
150
590

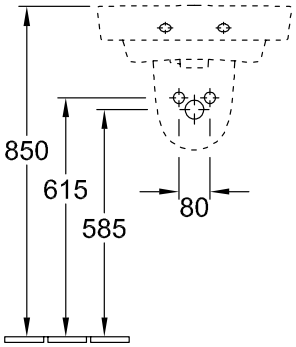
850
615
585
80

**52650001**

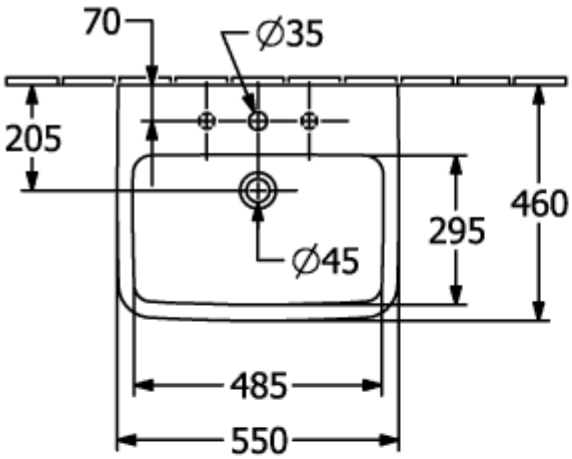


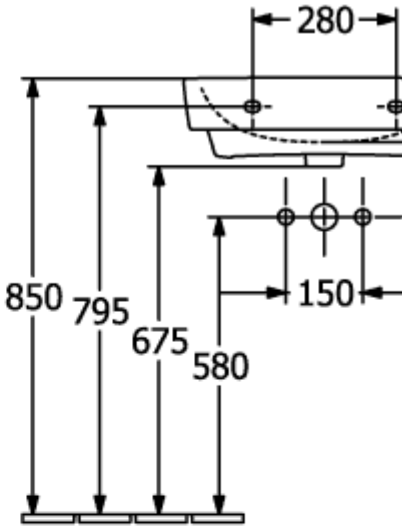


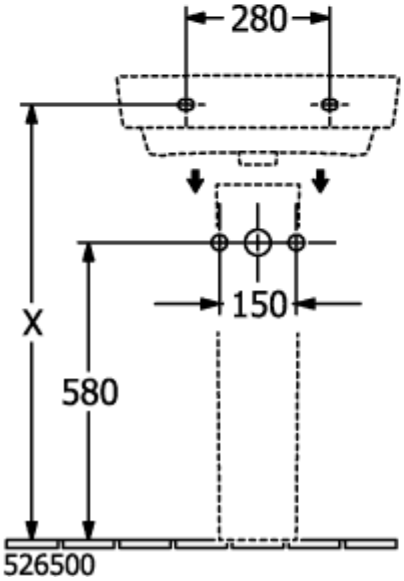


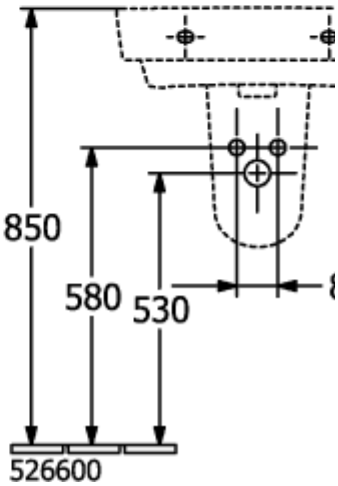


**52650001**

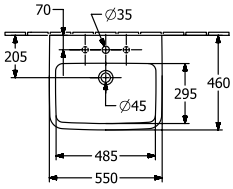


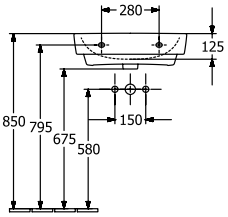


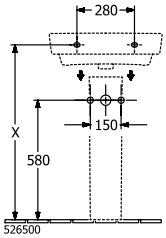


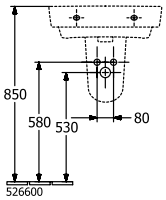

**52650001**

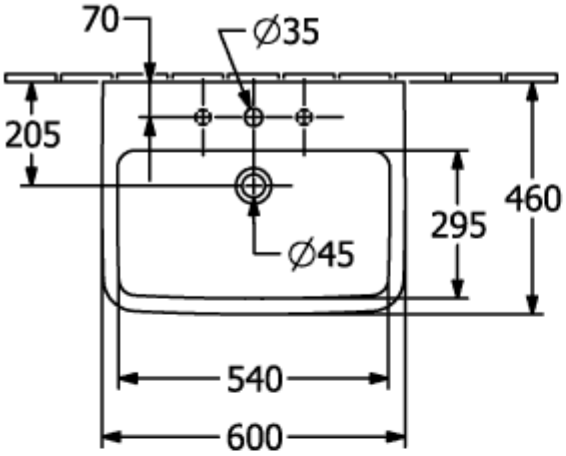


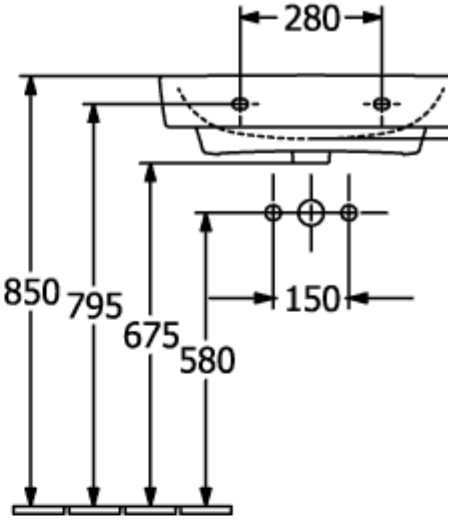


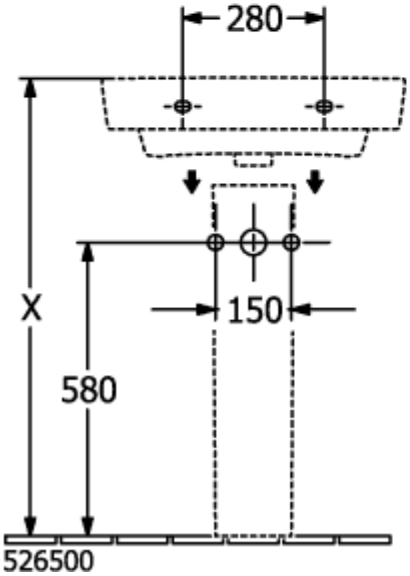


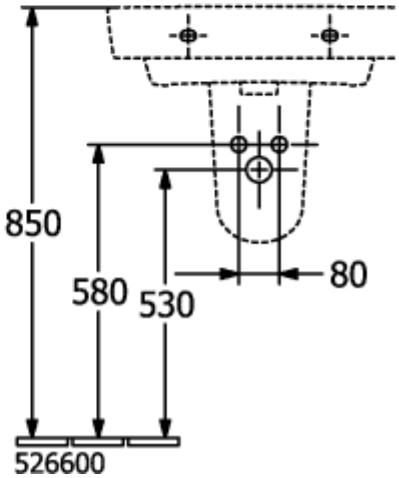


**52650001**

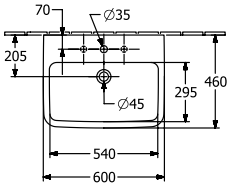


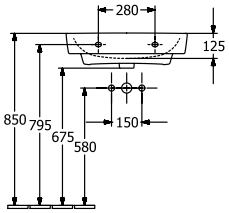


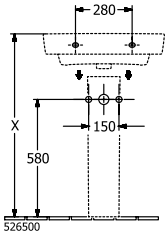


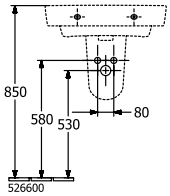

**52650001**

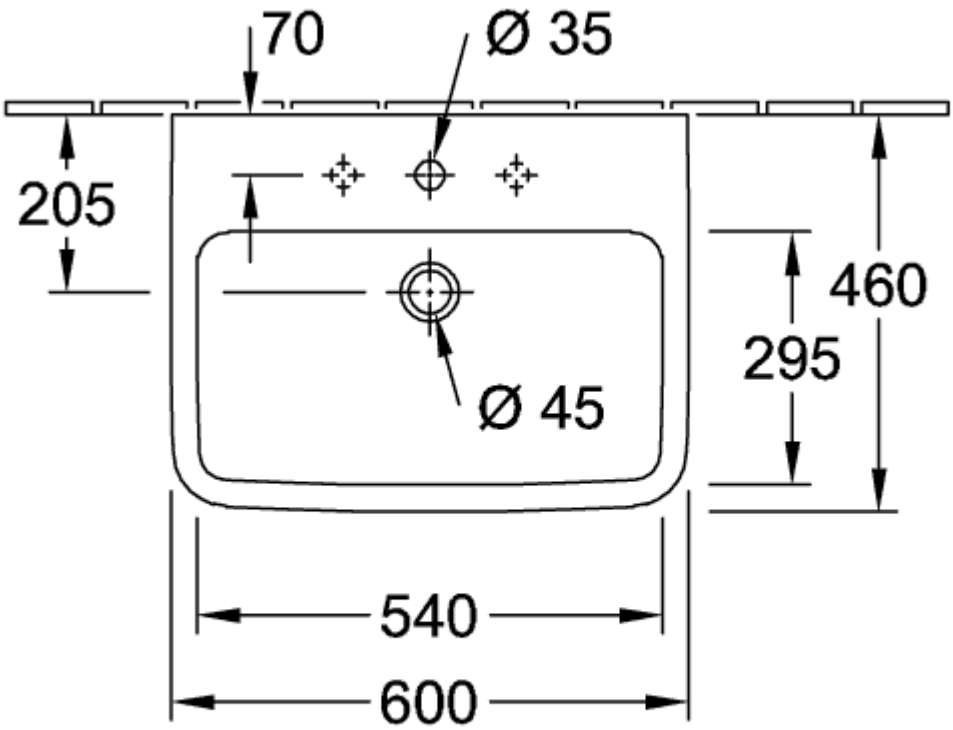
70
Ø 35
205
460
295
Ø 45
540
600

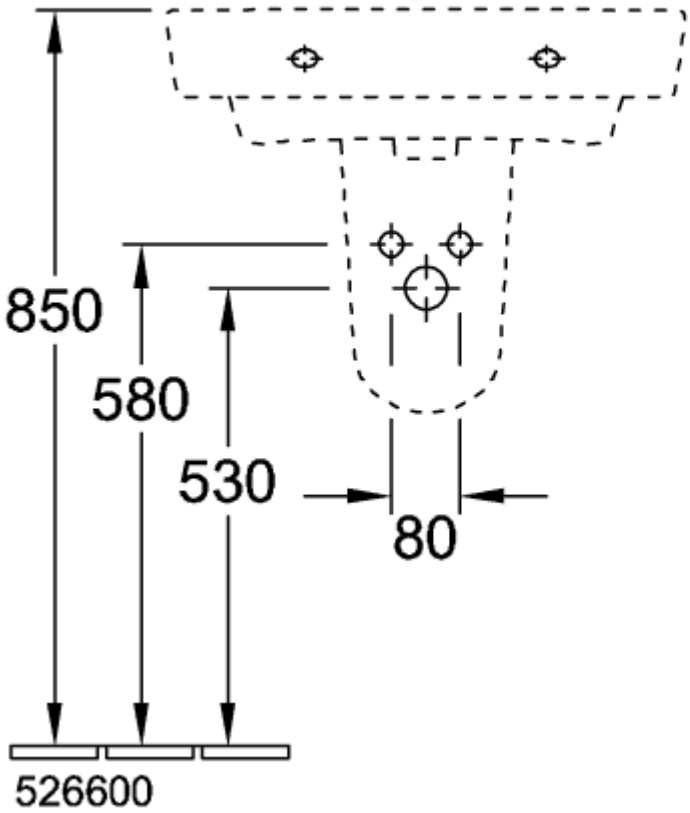
850
580
530
80
526600

## 52650001

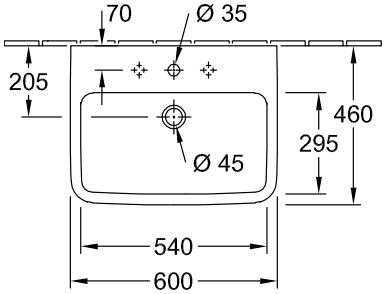


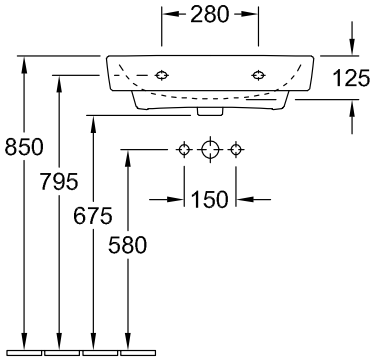


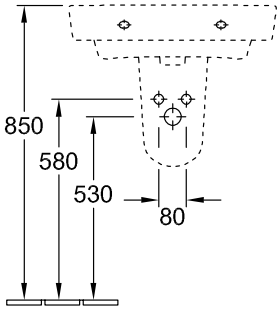


526600

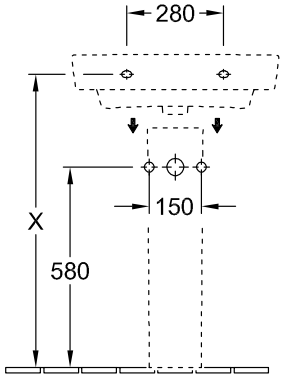


526500

## 52650001

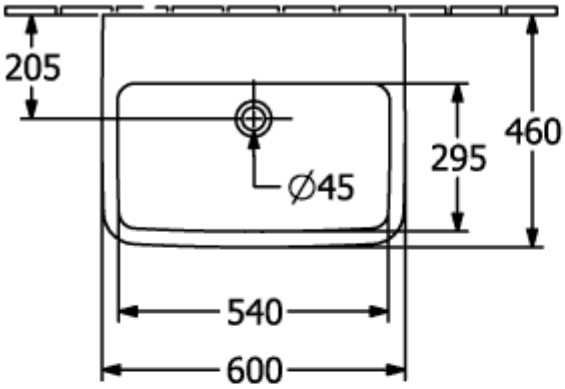


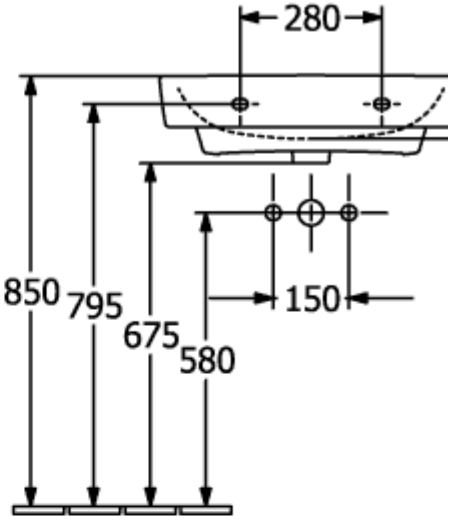


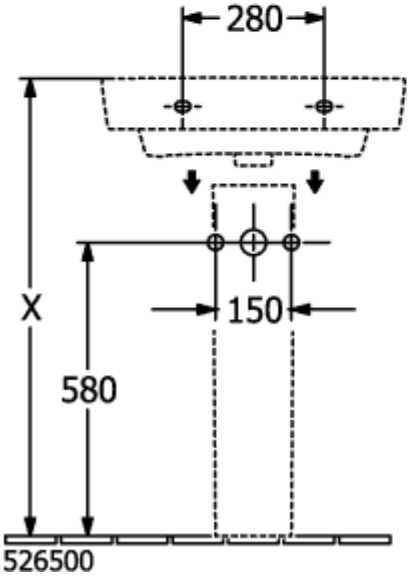


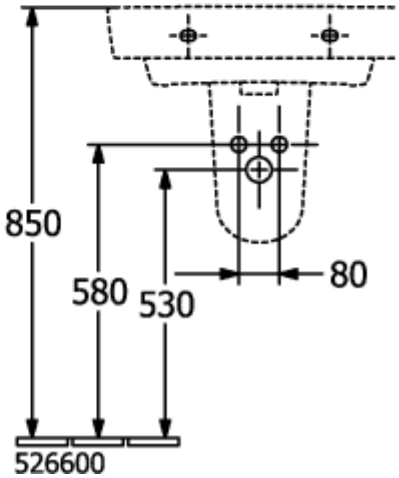


## 52650001

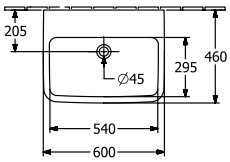


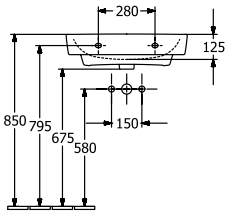


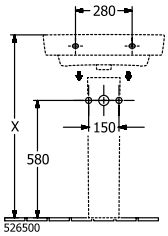


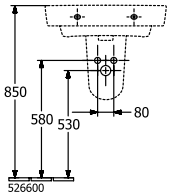

## 52650001

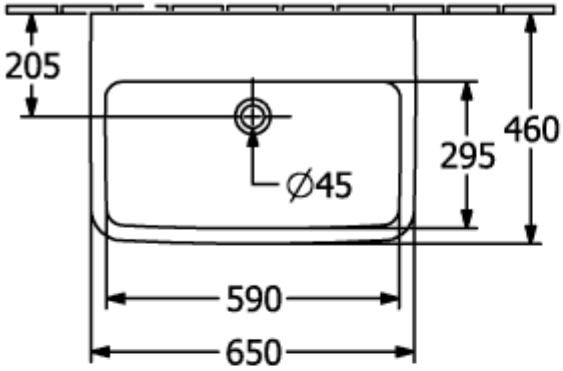


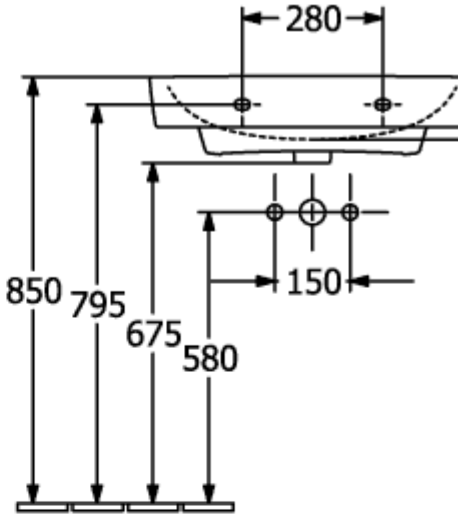


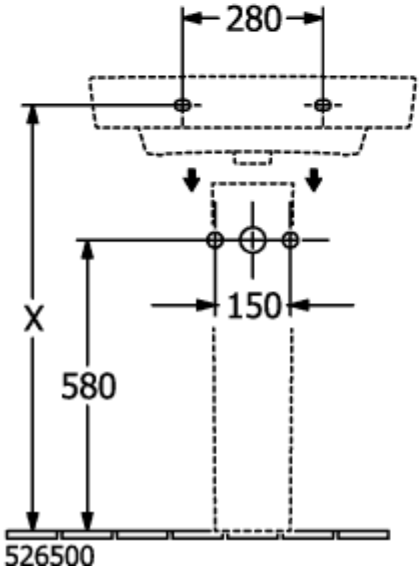


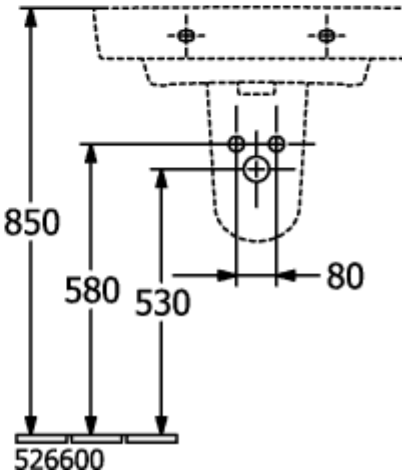


## 52650001

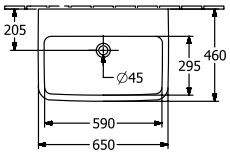


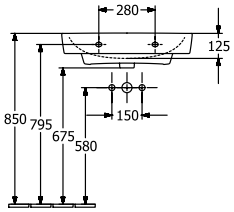


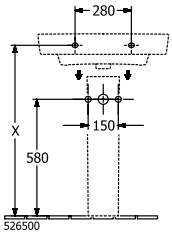


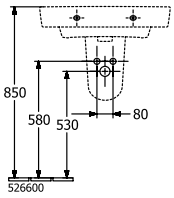

**52650001**

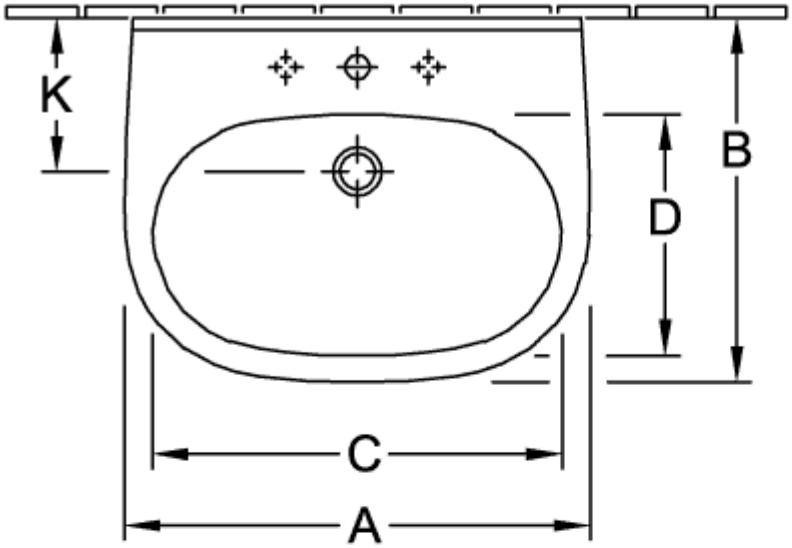


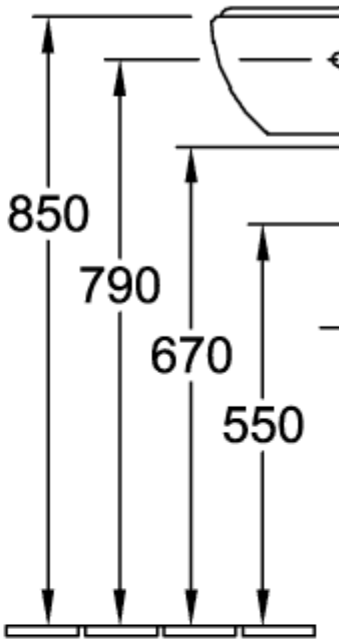


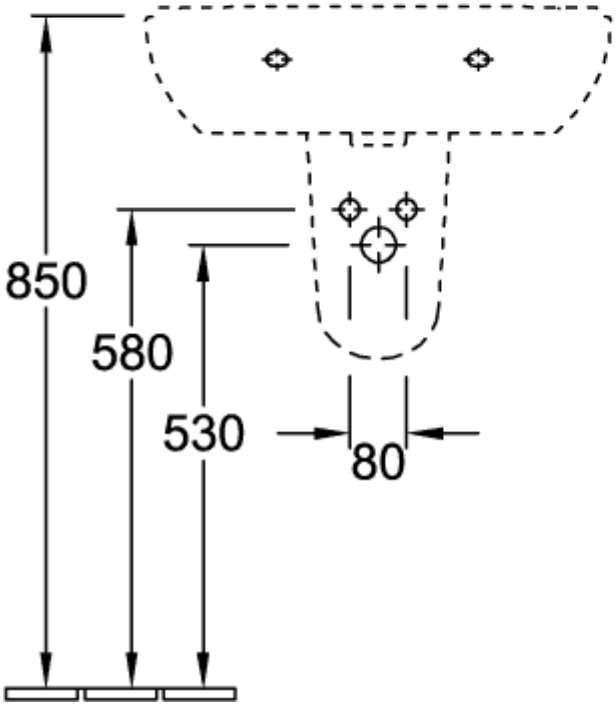


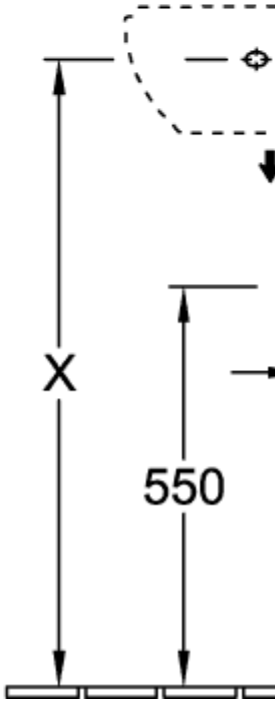

## 52650001

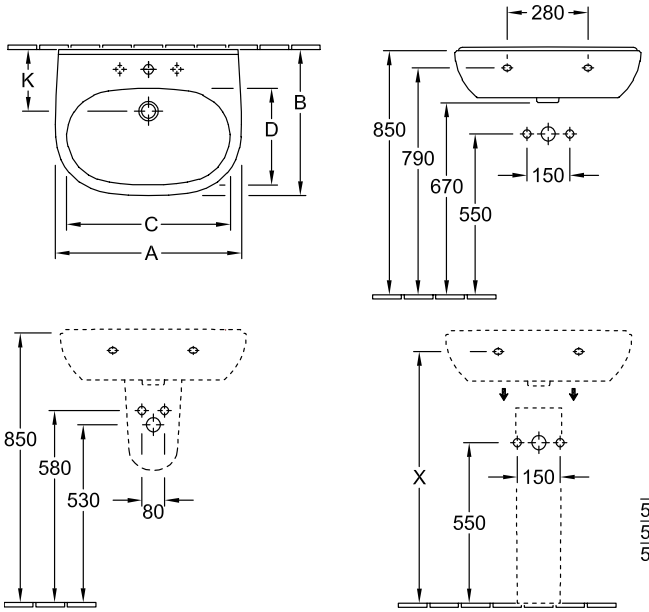


| | A | B | C | D |
|---|---|---|---|---|
| 5160 55 | 550 | 450 | 475 | 280 |
| 5160 60 | 600 | 490 | 525 | 315 |
| 5160 65 | 650 | 510 | 565 | 330 |

**52650001**

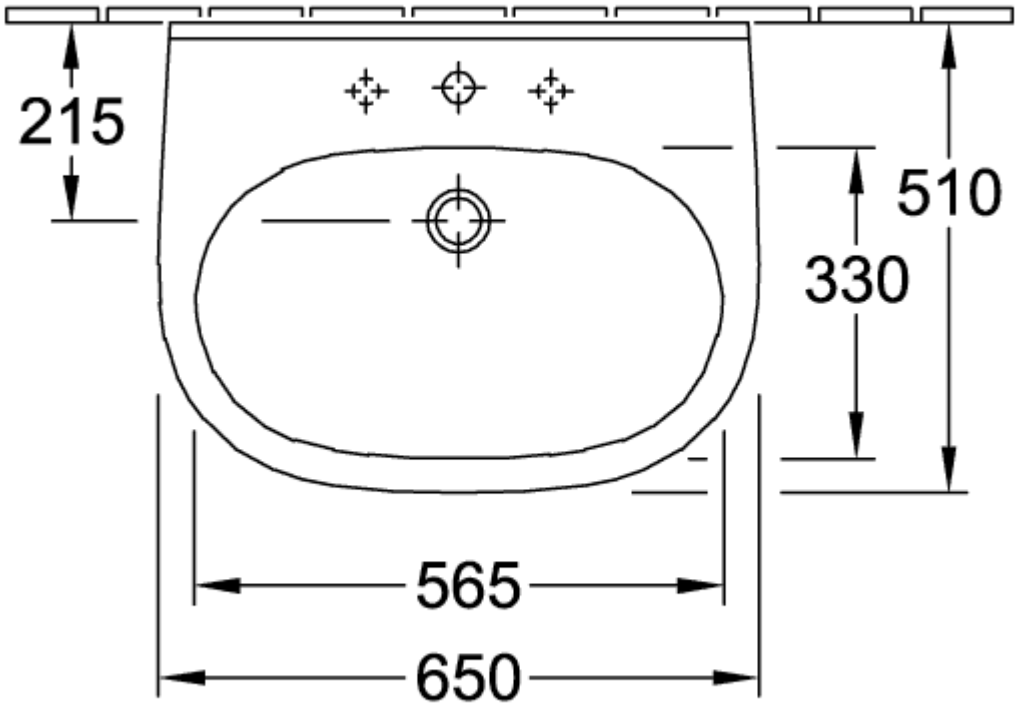


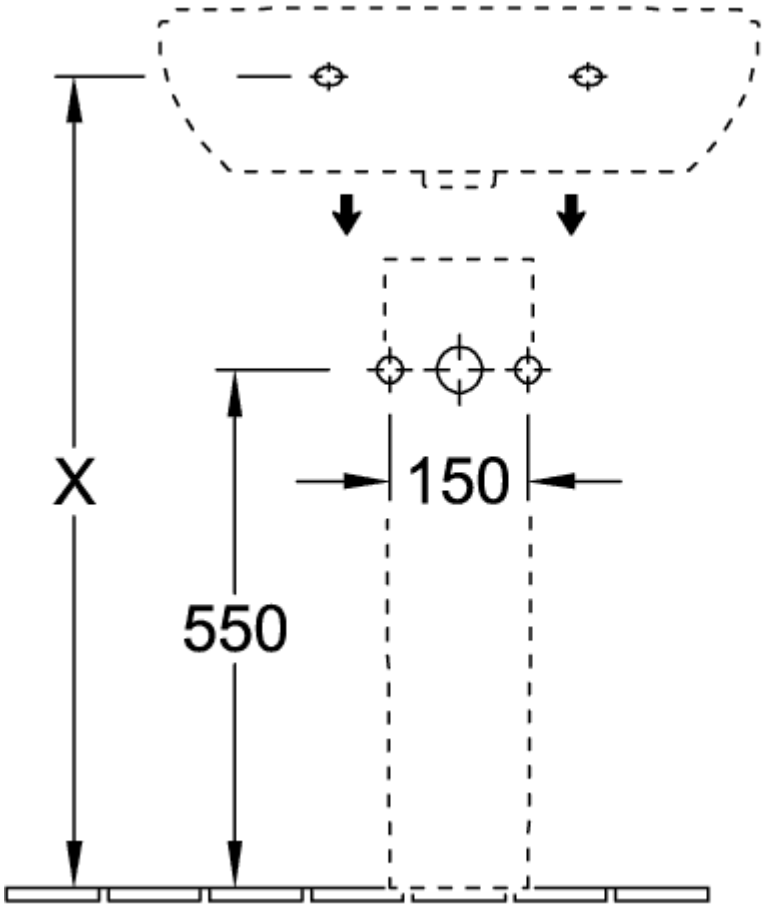


5265 00

## 52650001

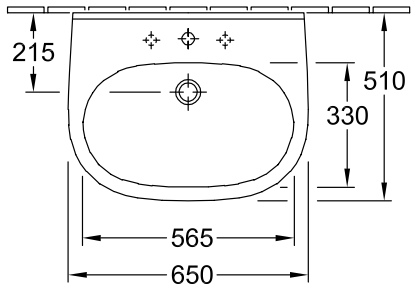


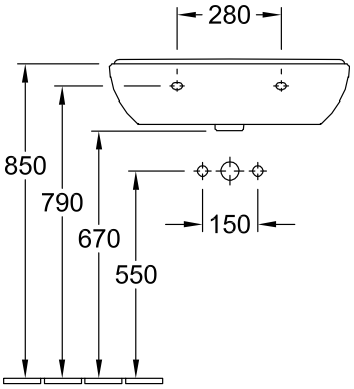


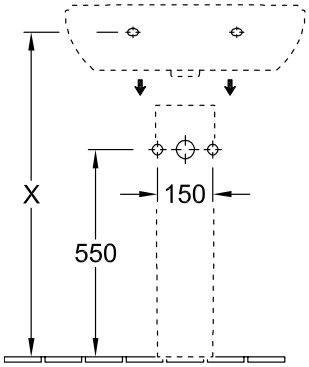


5265 00

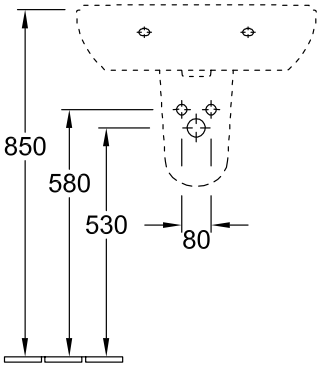


5266 00

**52650001**

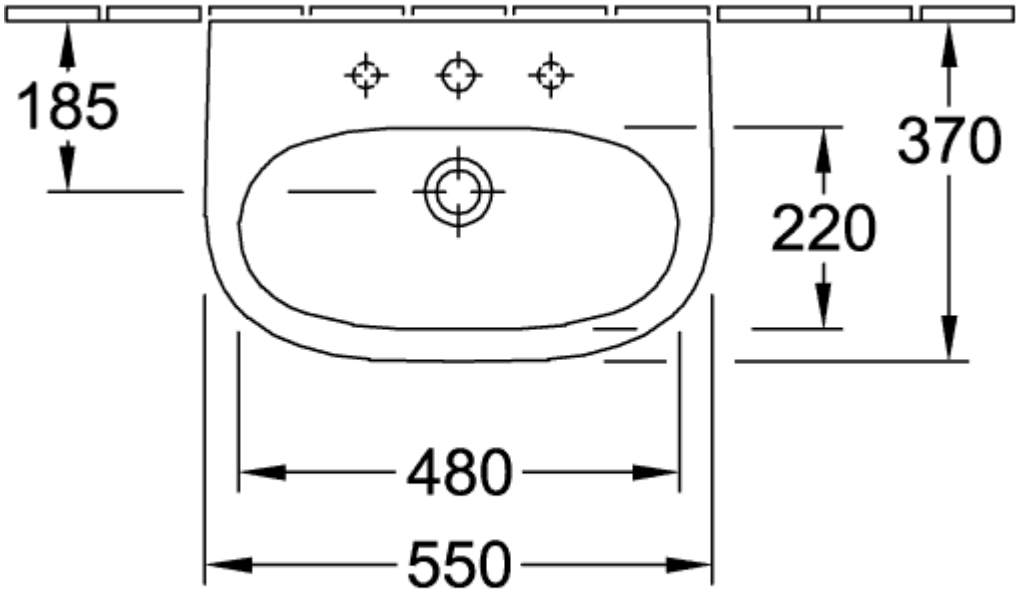
185
370
220
480
550

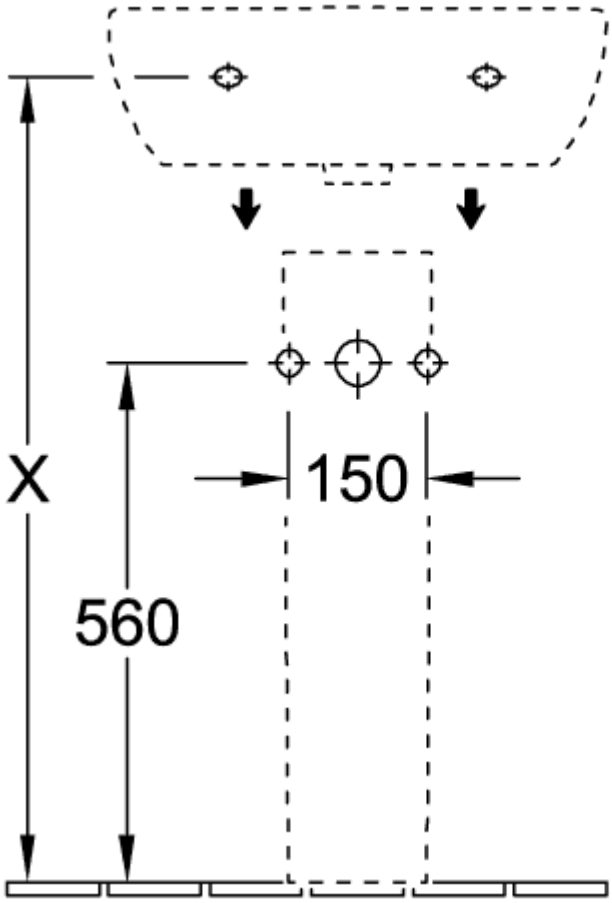
X
150
560

## 52650001

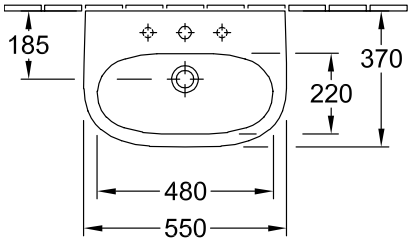


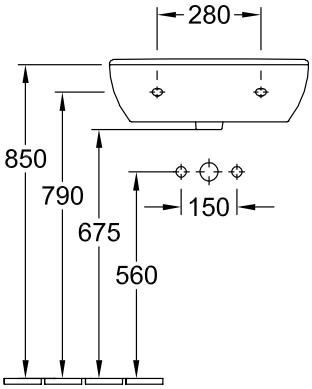


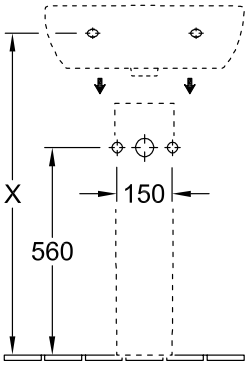

**52650001**

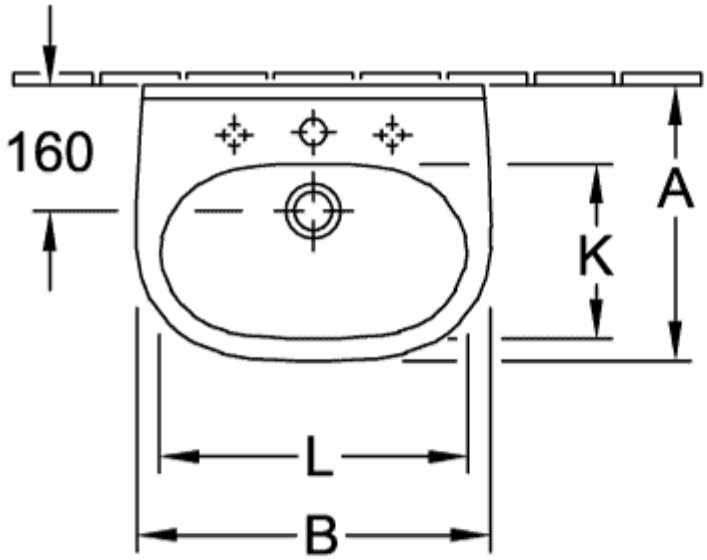


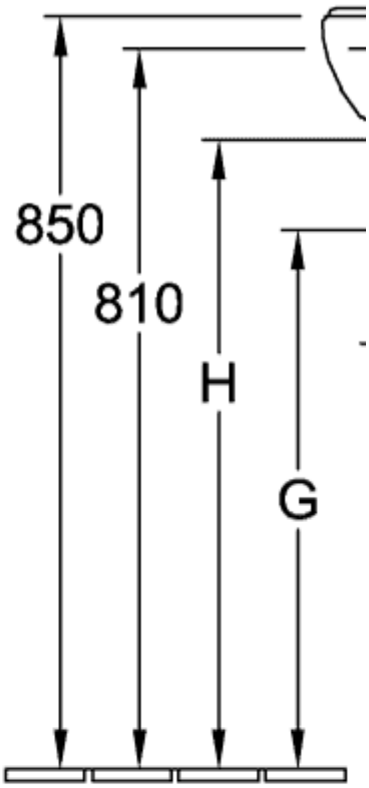


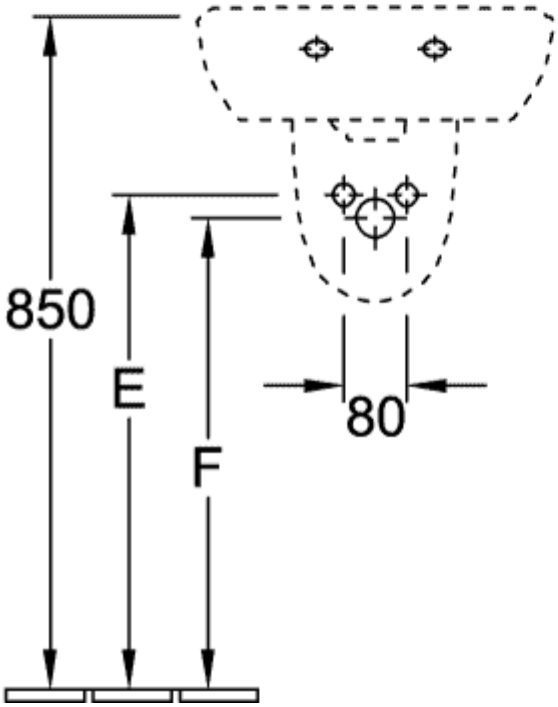


5360 45 / 46 / 47 /
5360 50 / 51 / 52 /

## 52650001

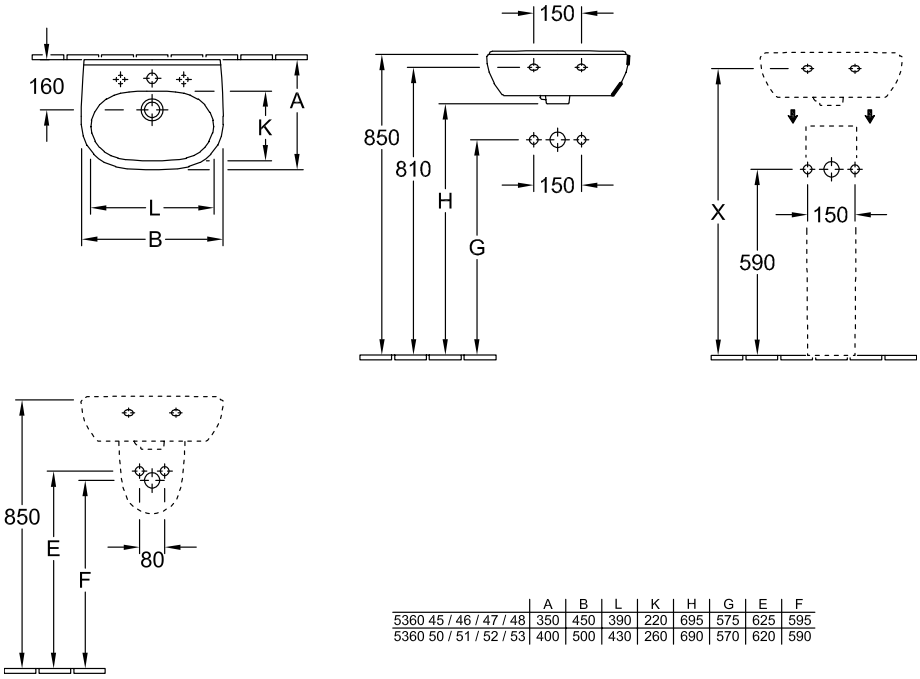


| | A | B | L | K | H | G | E | F |
|---|---|---|---|---|---|---|---|---|
| 5360 45 / 46 / 47 / 48 | 350 | 450 | 390 | 220 | 695 | 575 | 625 | 595 |
| 5360 50 / 51 / 52 / 53 | 400 | 500 | 430 | 260 | 690 | 570 | 620 | 590 |

**52650001**

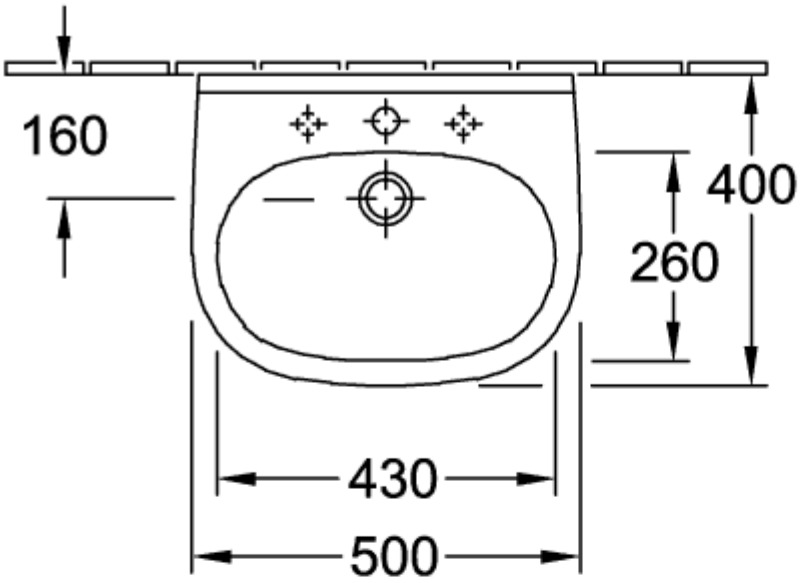


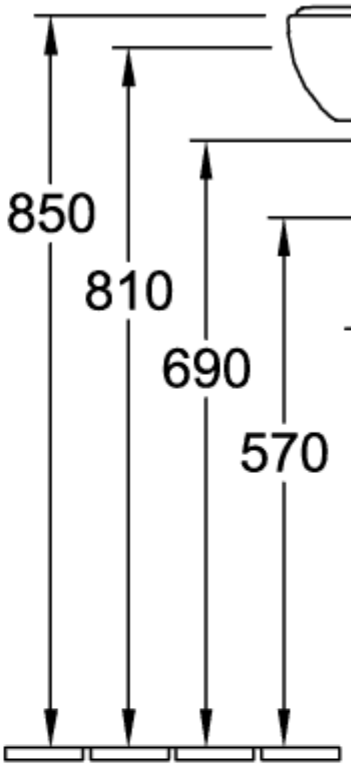


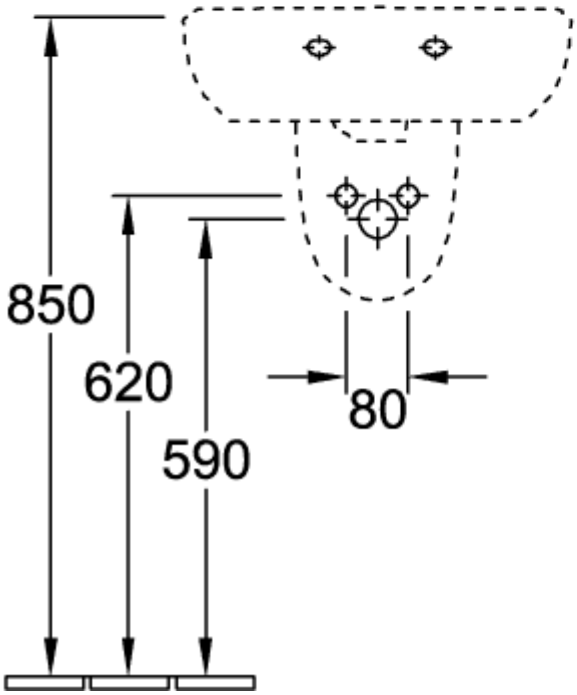

## 52650001

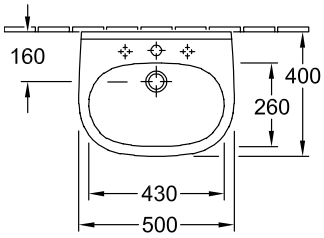
160
400
260
430
500

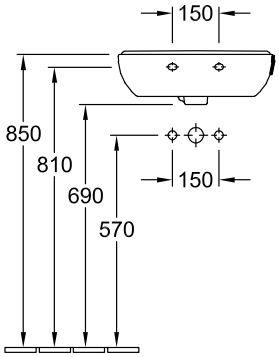
150
850
810
690
570
150

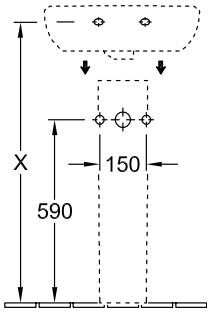
X
150
590

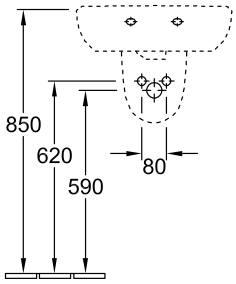
850
620
590
80

**52650001**

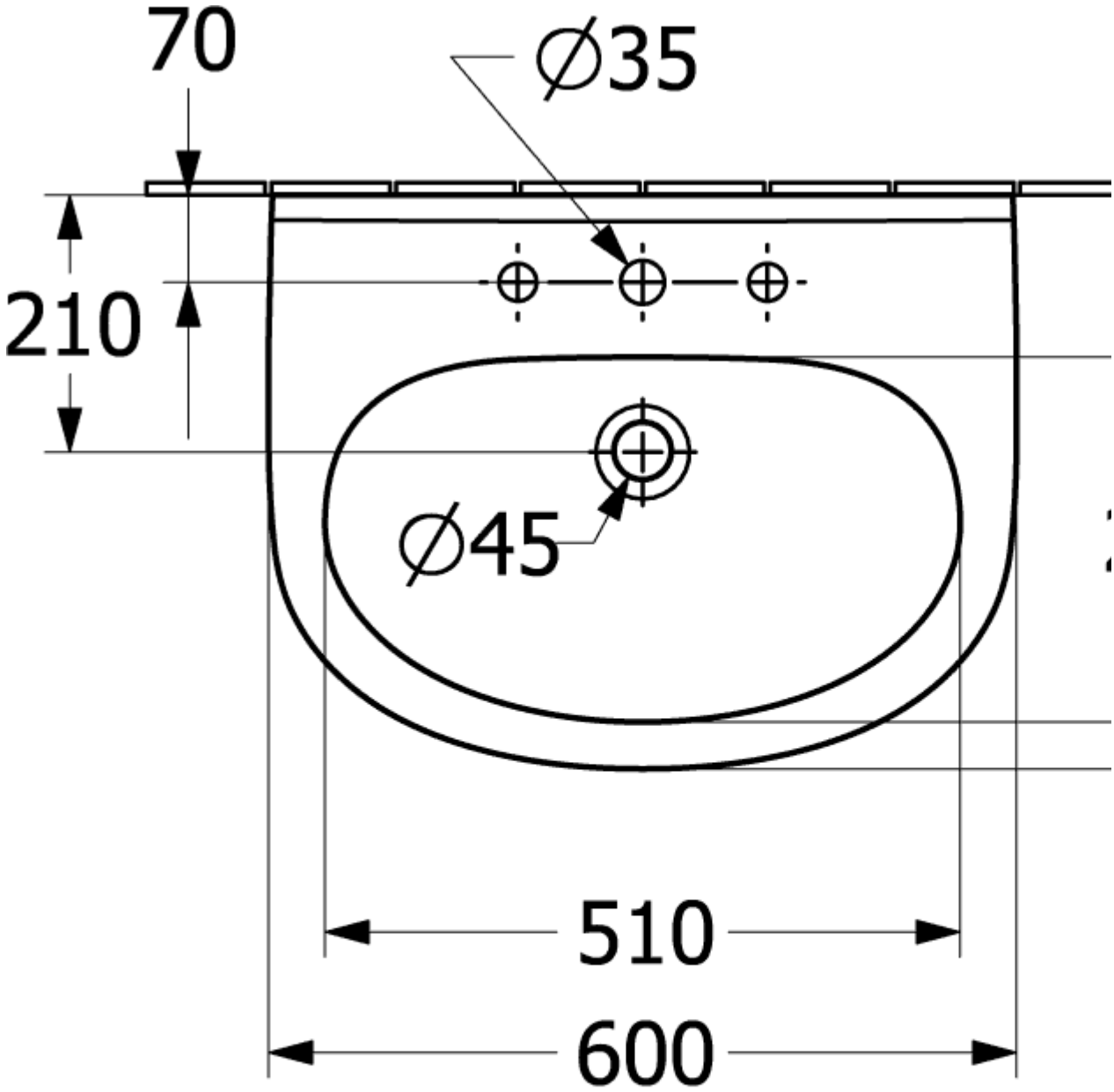
70
∅35
210
∅45
510
600

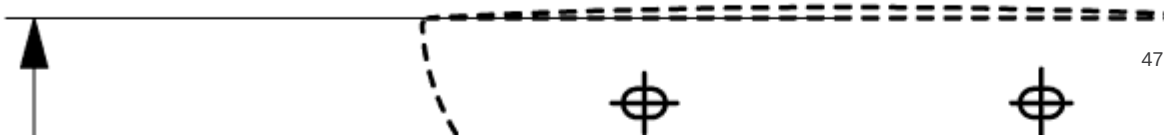

**52650001**

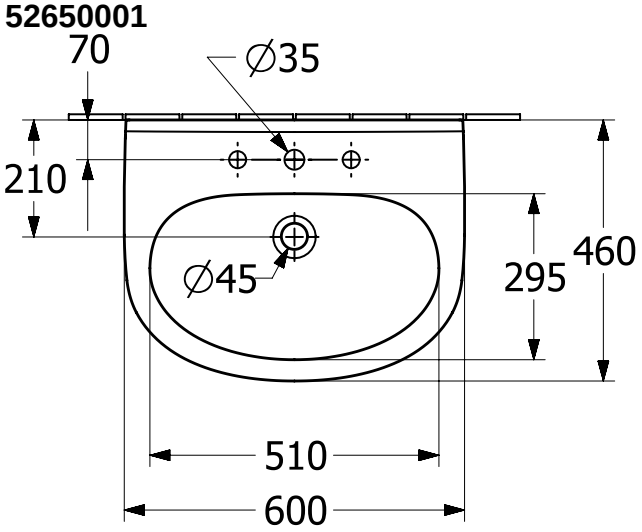
70
∅35
210
460
295
∅45
510
600

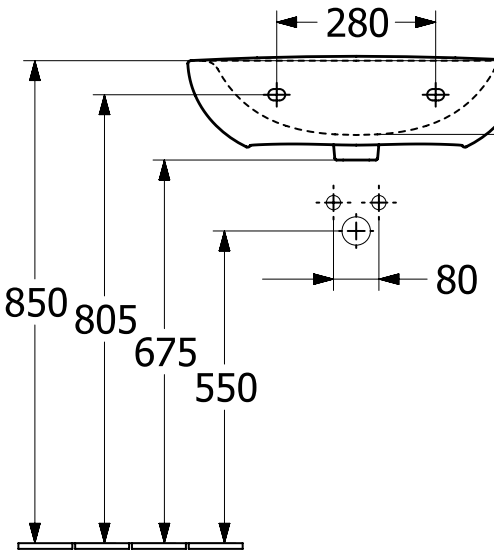
280
850
805
675
550
80

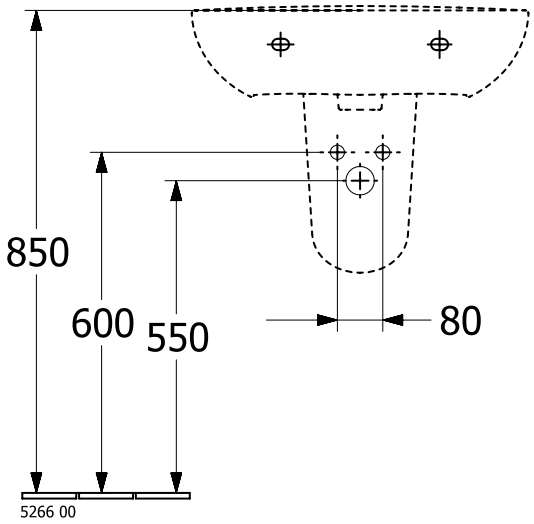
850
600
550
80
5266 00

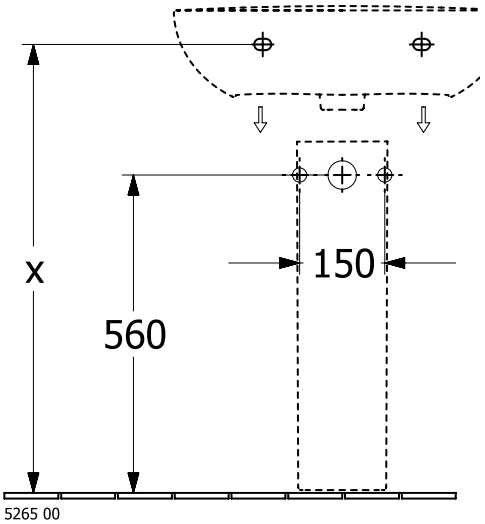
x
560
150
5265 00

**52650001**

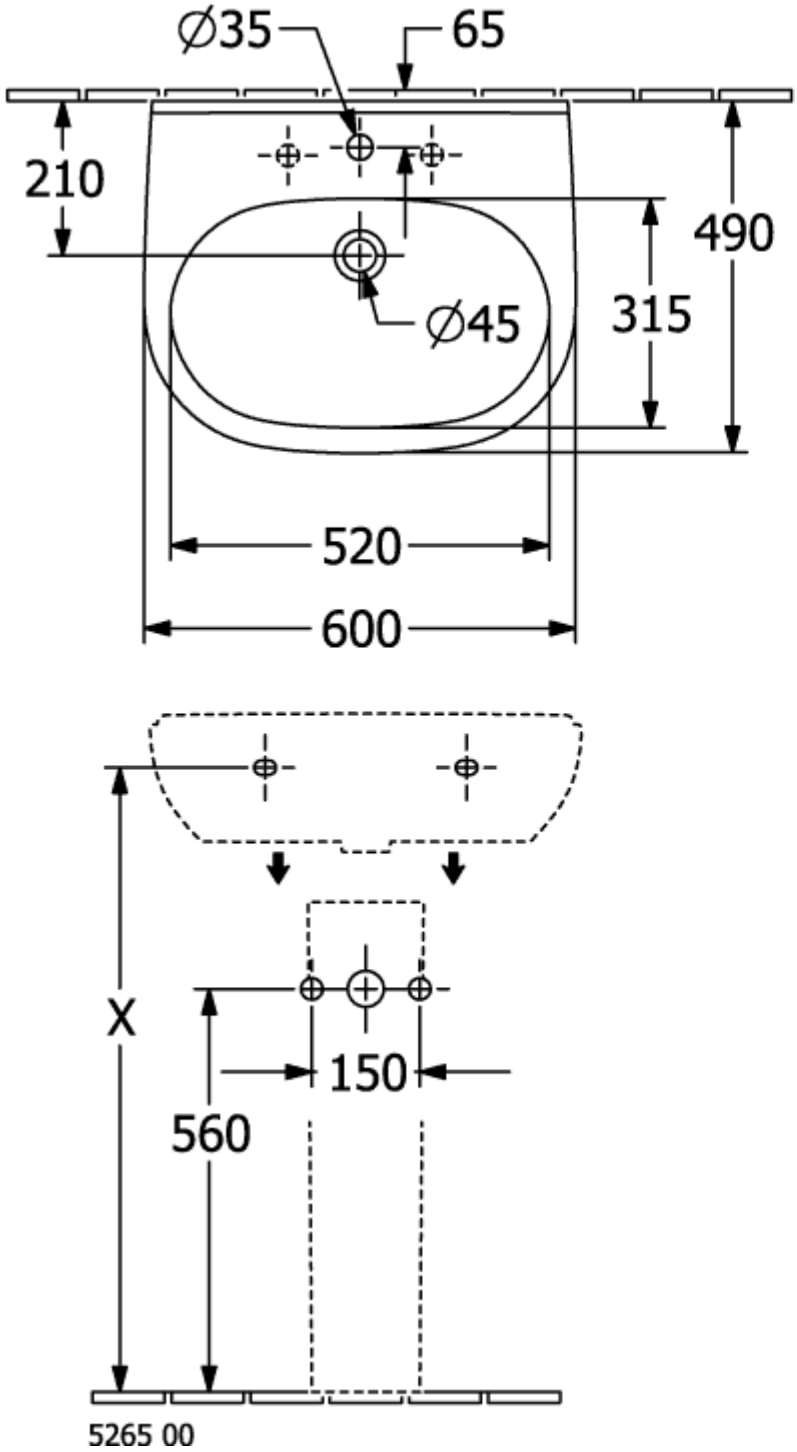
∅35
65
210
490
315
∅45
520
600
X
150
560
5265 00

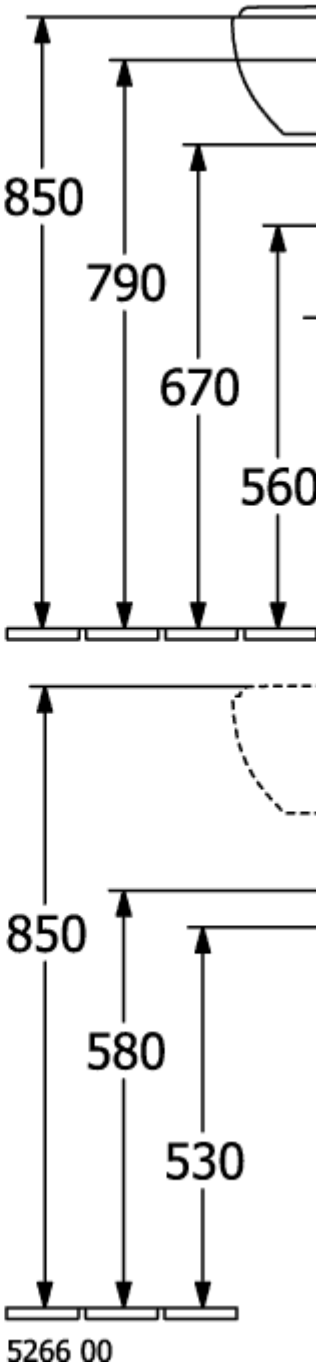
850
790
670
560
850
580
530
5266 00

## 52650001

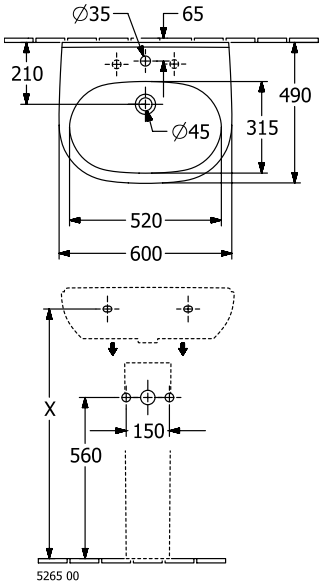


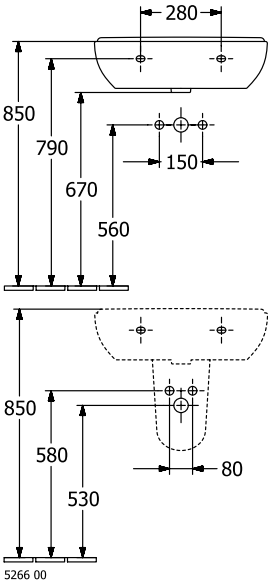


## 52650001

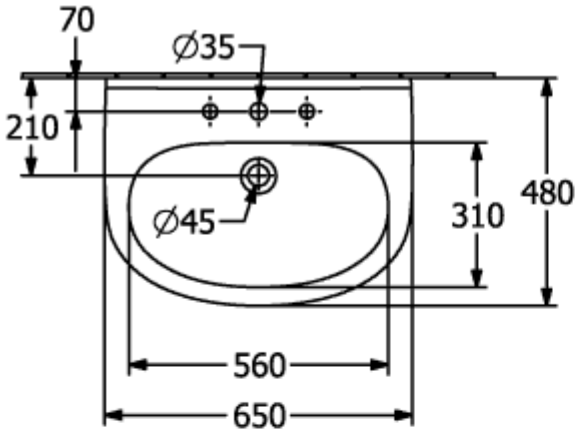


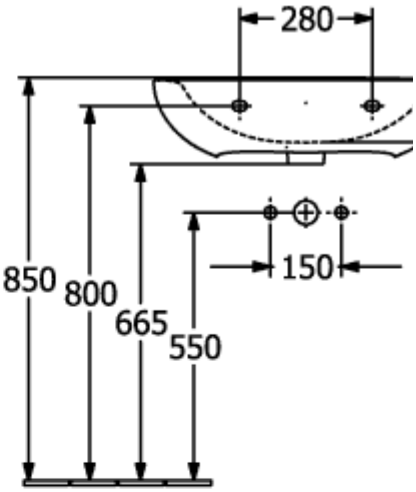


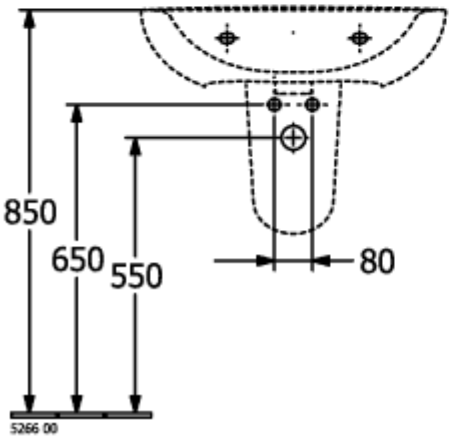


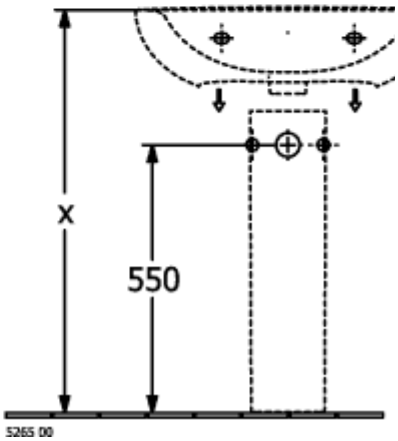

# 52650001

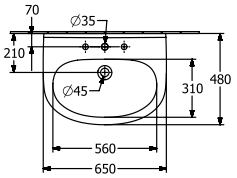
70
∅35
210
∅45
310
480
560
650

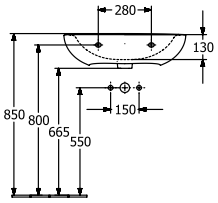
280
130
850
800
665
550
150

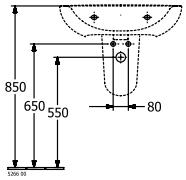
850
650
550
80

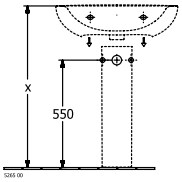
x
550

**52650001**

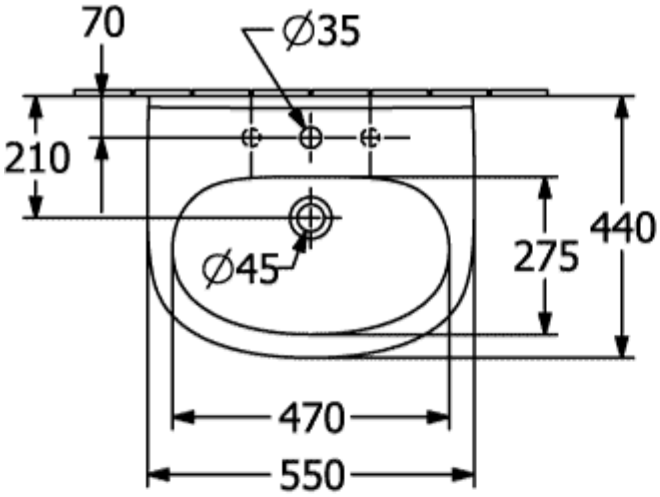
70
Ø35
210
440
275
Ø45
470
550

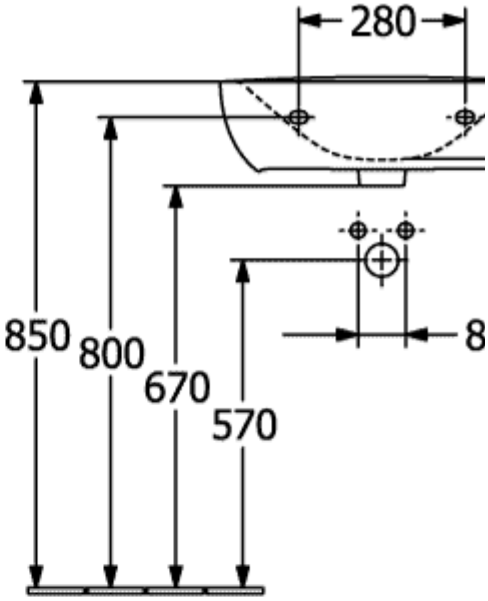
280
850
800
670
570
8

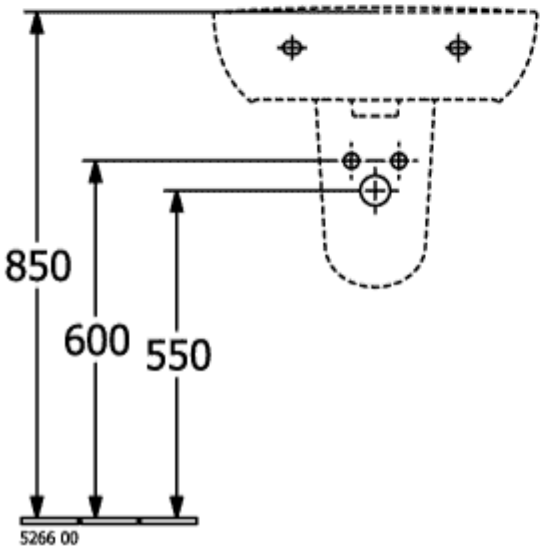
850
600
550
5266 00

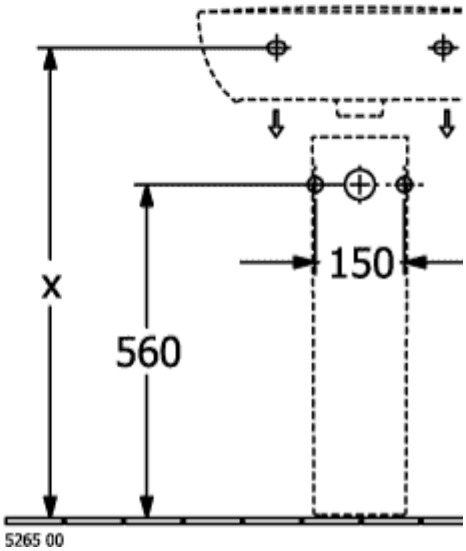
x
560
150
5265 00

## 52650001

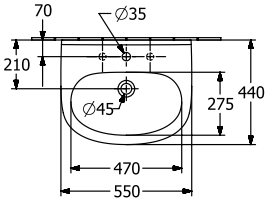
70
∅35
210
440
275
∅45
470
550

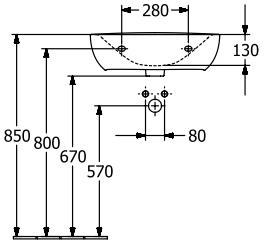
280
130
850
800
670
570
80

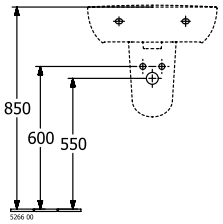
850
600
550
5266 00

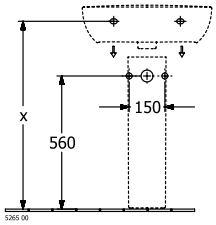
x
560
150
5265 00

**52650001**

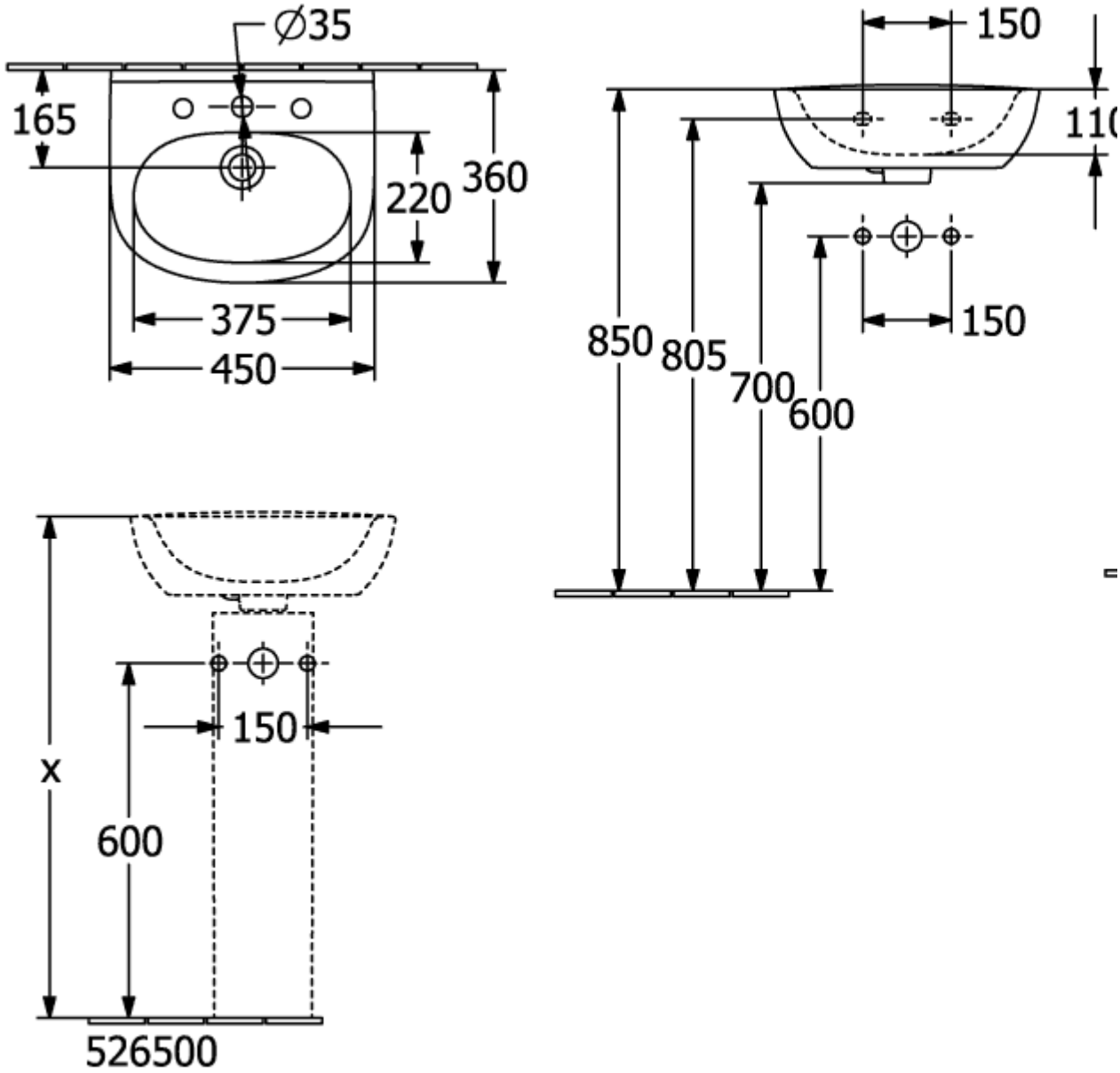

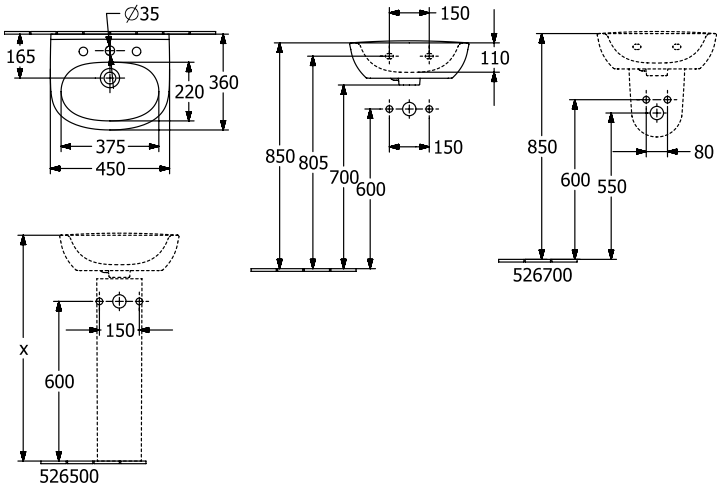
**52650001**