FINION WASHDOWN TOILET, RIMLESS RECTANGLE

PRODUCT INFORMATION

Article title	Villeroy & Boch Finion Washdown toilet, rimless, wall-mounted, Stone White CeramicPlus
Article number	4664R0RW
Assembly / Assembly type	wall-mounted
Assembly instructions	not suitable for installation with flush valves
Scope of delivery	1 x washdown toilet, rimless , 1 x fastening set
Depth in mm	560
Width in mm	375
Height in mm	350
Collection	Finion
Suitable for	Concealed cistern
Innovative flushing technology (with TwistFlush)	No
Flush volume l	3 / 4,5 l
Wall-mounted - floor-standing	wall-mounted
Material	Sanitary ceramics
surface	matt
Colour name	Stone White CeramicPlus
Design Awards	iF Product Design Award 2017
Shape	Rectangle
Colour designation	Stone White
Antibacterial surface (with AntiBac)	No
Easy surface cleaning (CeramicPlus)	Yes
Rimless (mit DirectFlush)	Yes
Flush type	Washdown toilet
Integrated freshness solution (with ViFresh)	No
Outlet / outlet	horizontal outlet

TECHNICAL DRAWINGS

4664R0RW

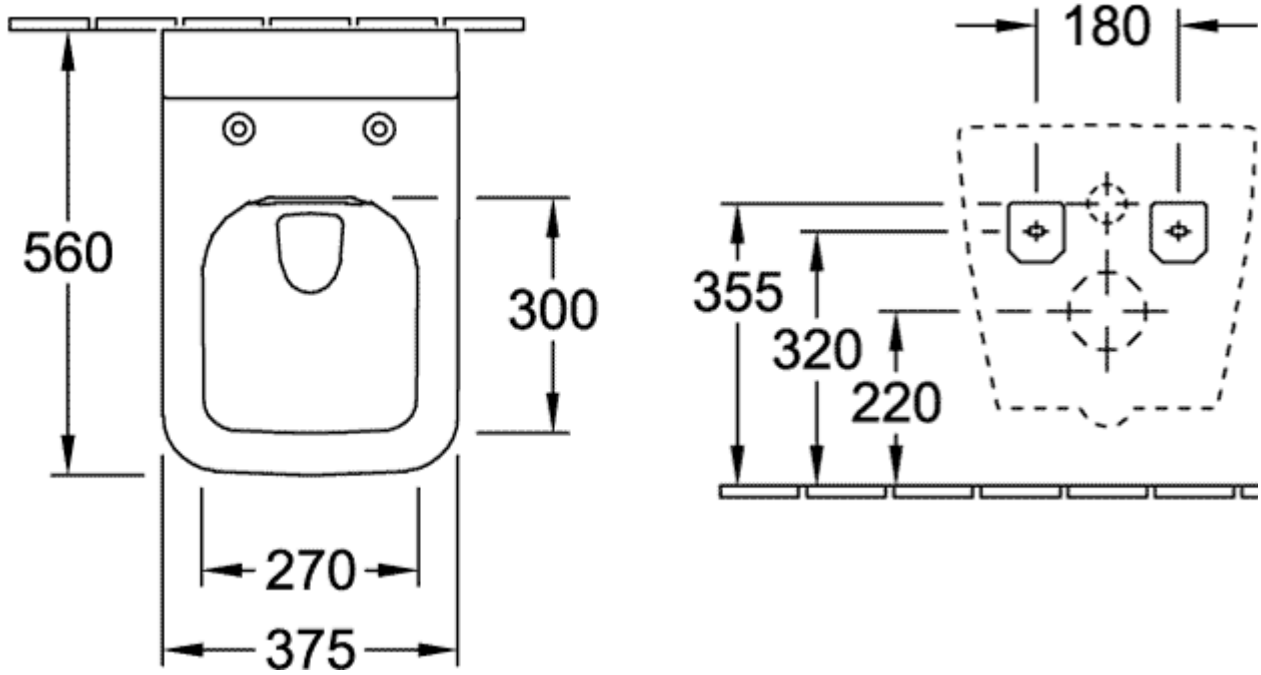
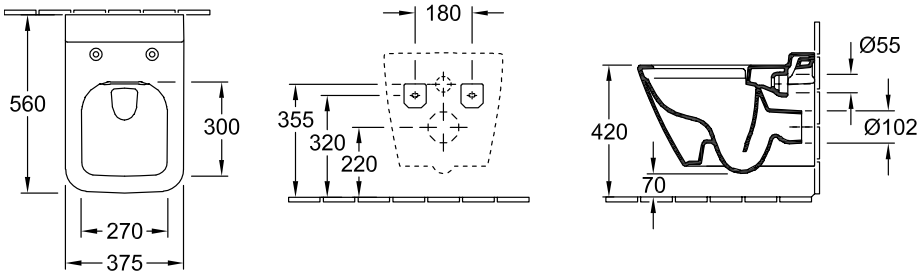
4664R0RW