OBERON 2.0 WALL-FACING BATH WALL-FACING

PRODUCT INFORMATION

Article title	Villeroy & Boch Oberon 2.0 Wall-facing bath ColourOnDemand, 1800 x 800 mm, Stone White
Article number	UBQ180OBR9CDBCV-RW
Assembly / Assembly type	wall-mounted
Scope of delivery	1 x back-to-wall bath , 1 x extended outlet and overflow (chrome-plated and white)
Length in mm	1800
Width in mm	800
Height in mm	620
Interior depth	460
Collection	Oberon 2.0
Material	Quaryl®
Colour name	Stone White
Other material	• Waste/overflow combination: Plastic • Plastic Outlet cover: Plastic • Plastic
Other surfaces	Waste/overflow combination: glossy, glossy, Outlet cover: glossy|glossy
With overflow	Yes
Number of people	2
Shape	Wall-facing
Colour designation	Stone White
Other colour designations	Waste/overflow combination: Chrome, White Alpin, Outlet cover: Chrome|White Alpin
With slip resistance	No
Outlet / outlet	central outlet
Interior form	oval
SilentFlow	No

TECHNICAL DRAWINGS

UBQ180OBR9CDBCV-RW

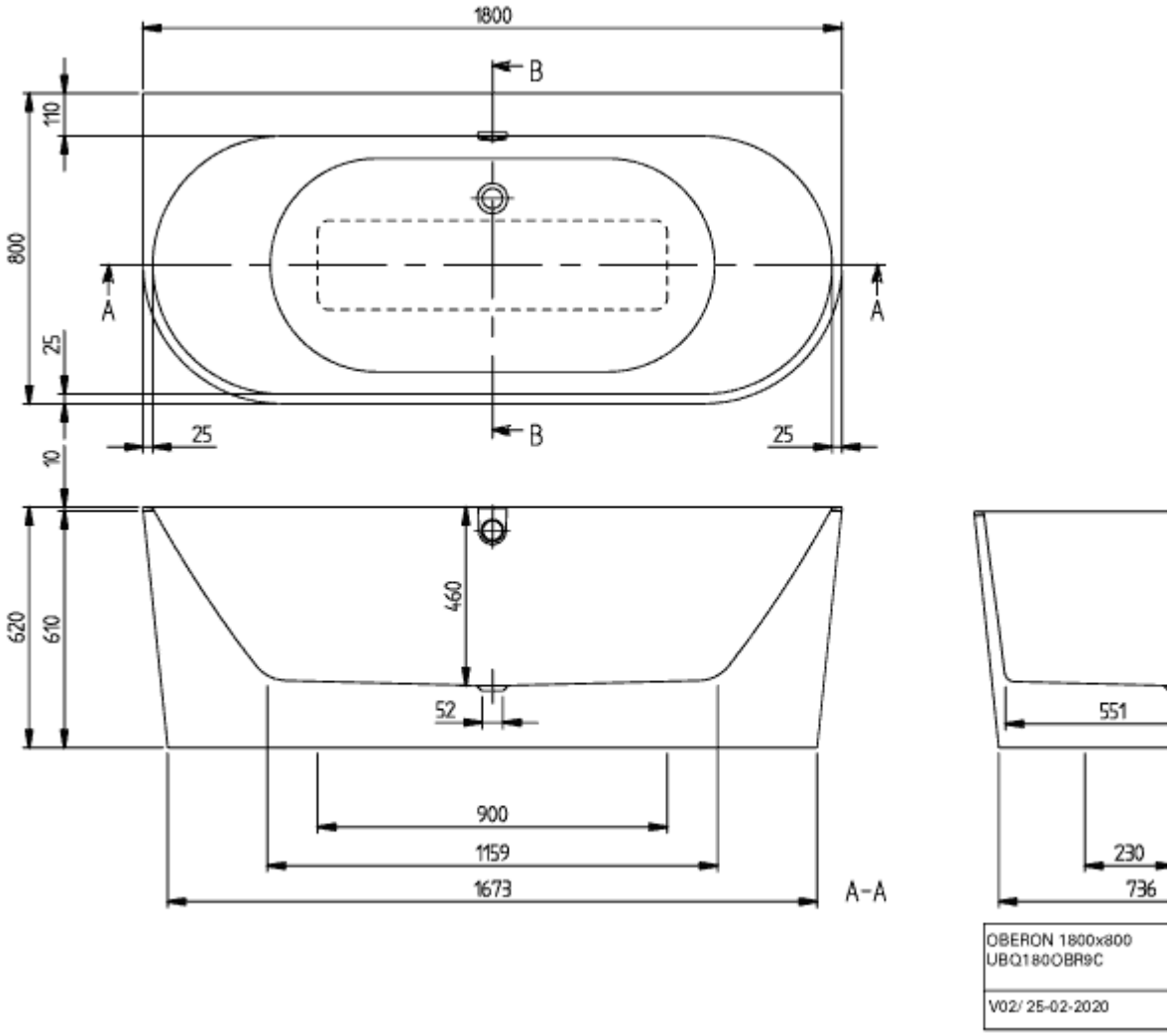
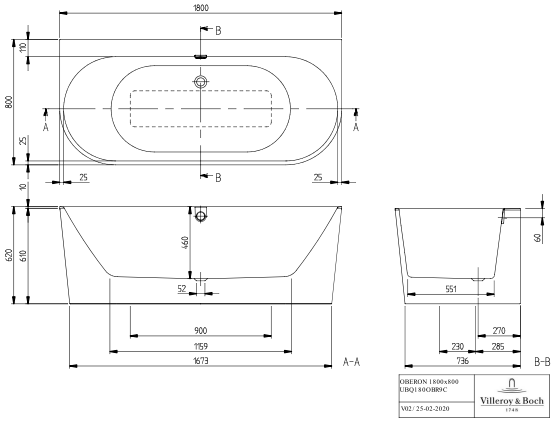
UBQ180OBR9CDBCV-RW