OBERON RECTANGULAR BATH RECTANGLE

PRODUCT INFORMATION

Article title	Villeroy & Boch Oberon Rectangular bath, 1800 x 800 mm, Stone White
Article number	UBQ180OBE2V-RW
Assembly / Assembly type	built-in installation
Scope of delivery	1 x rectangular bath , 2 x bath support frame (self-adhesive), adjustable from 130 - 180 mm
Length in mm	1800
Width in mm	800
Height in mm	495
Interior depth	470
Collection	Oberon
Material	Quaryl®
Colour name	Stone White
With overflow	Yes
Number of people	1
Shape	Rectangle
Colour designation	Stone White
With slip resistance	No
Outlet / outlet	outlet at the foot end
Interior form	oval
SilentFlow	No

TECHNICAL DRAWINGS

UBQ180OBE2V-RW

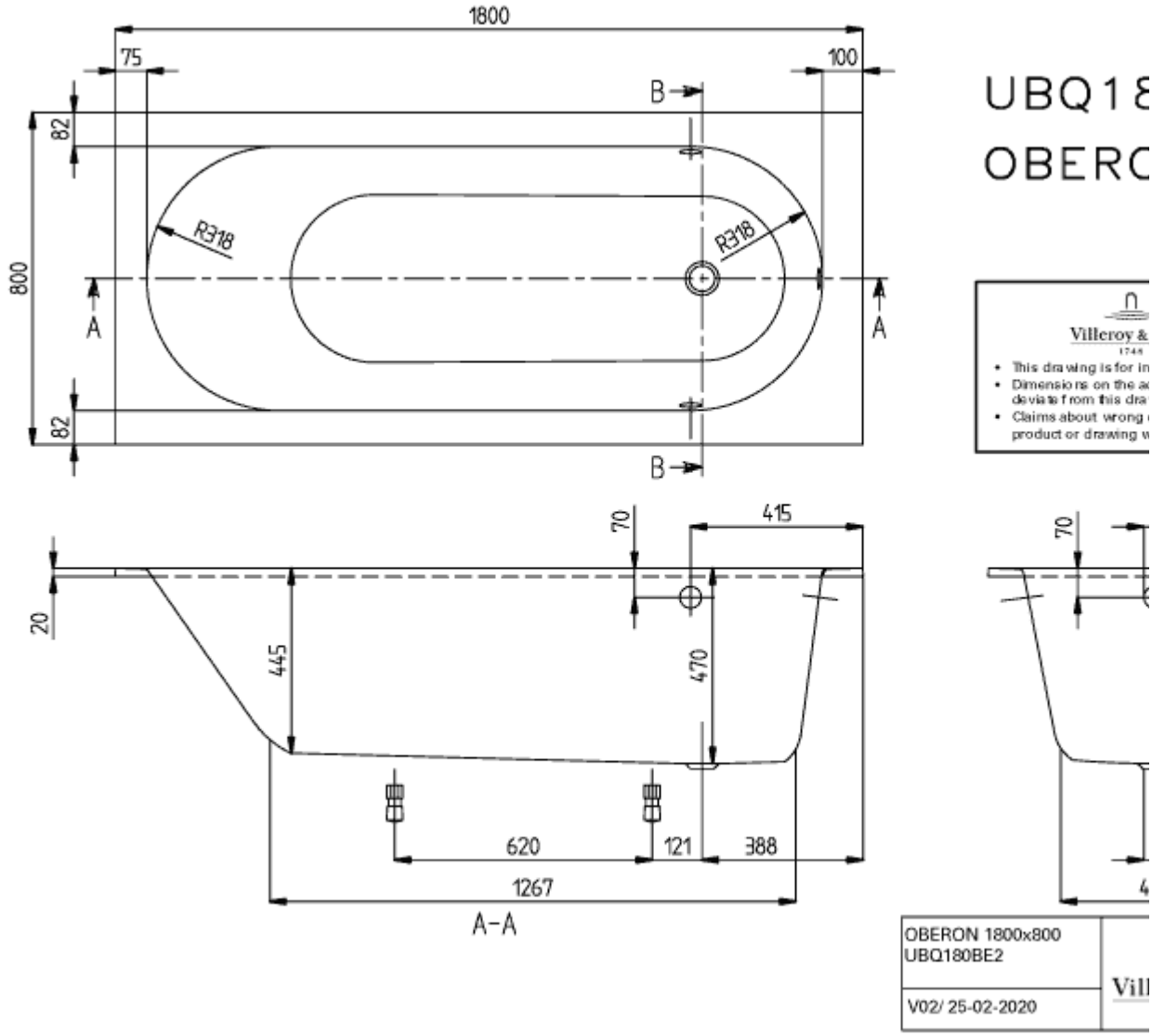
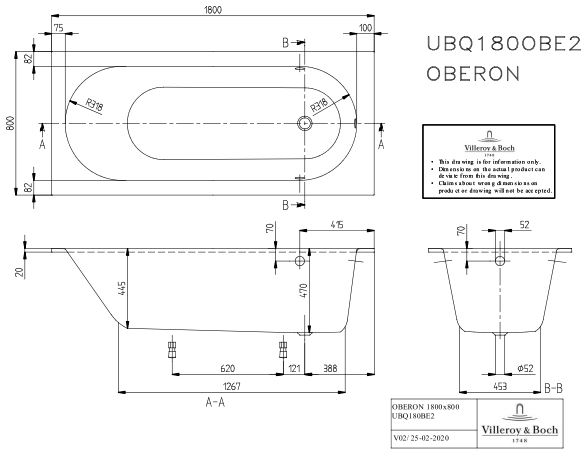
UBQ180OBE2V-RW