# MY ART RECTANGULAR BATH RECTANGLE

## PRODUCT INFORMATION

| | |
|---|---|
| Article title | Villeroy & Boch My Art Rectangular bath, 1800 x 800 mm, White Alpin |
| Article number | UBQ180MYA2V-01 |
| Assembly / Assembly type | built-in installation |
| Scope of delivery | 1 x rectangular bath , 2 x bath support frame (self-adhesive), adjustable from 130 - 180 mm |
| Length in mm | 1800 |
| Width in mm | 800 |
| Height in mm | 525 |
| Interior depth | 500 |
| Collection | My Art |
| Material | Quaryl® |
| Colour name | White Alpin |
| With overflow | Yes |
| Number of people | 2 |
| Shape | Rectangle |
| Colour designation | White Alpin |
| With slip resistance | No |
| Outlet / outlet | central outlet |
| Interior form | other |
| SilentFlow | No |

## TECHNICAL DRAWINGS

**UBQ180MYA2V-01**

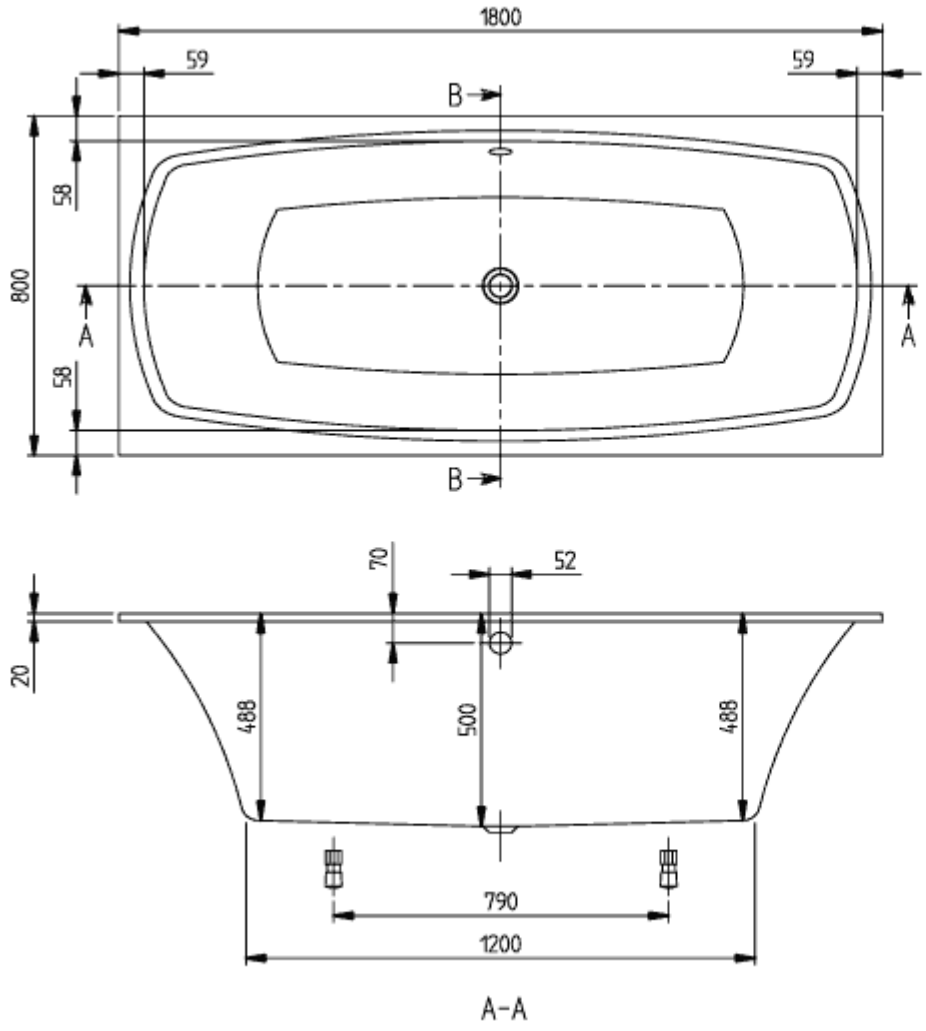

| |
|---|
| MY ART 1800x800<br>UBQ180MYA2 |
| V02/ 25-02-2020 |
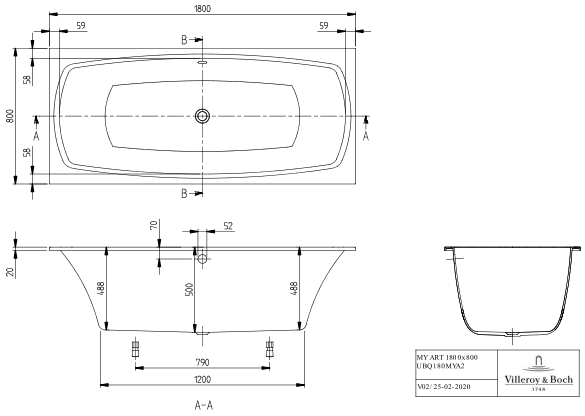
# UBQ180MYA2V-01