COLLARO WALL-FACING BATH WALL-FACING

PRODUCT INFORMATION

Article title	Villeroy & Boch Collaro Wall-facing bath, 1795 x 790 mm, White Alpin
Article number	UBA180COR9CS00VE01
Assembly / Assembly type	wall-mounted
Assembly instructions	Central positioning of the tap fitting is not possible.
Scope of delivery	1 x back-to-wall bath , 1 x matching outlet and overflow 2 x frames with 2 feet
Length in mm	1795
Width in mm	790
Height in mm	630
Interior depth	470
Collection	Collaro
Material	Acrylic
Colour name	White Alpin
Other material	Waste/overflow combination: Plastic Outlet cover: Plastic
Other surfaces	Waste/overflow combination: glossy, Outlet cover: glossy
With overflow	Yes
Number of people	2
Shape	Wall-facing
Colour designation	White Alpin
Other colour designations	Waste/overflow combination: Chrome, Outlet cover: Champagne
With slip resistance	No
Outlet / outlet	central outlet
Interior form	rectangular
SilentFlow	No

TECHNICAL DRAWINGS

UBA180COR9CS00VE01

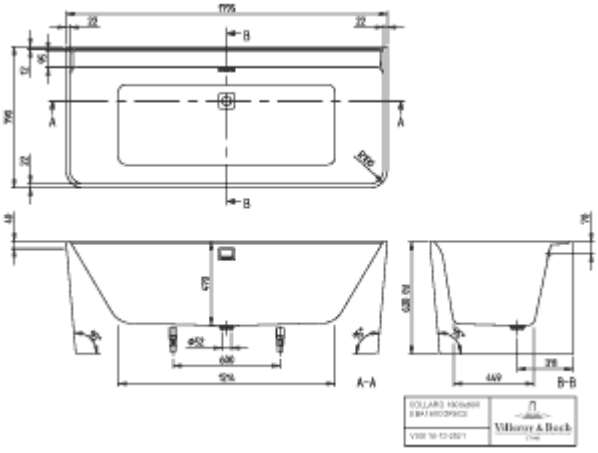
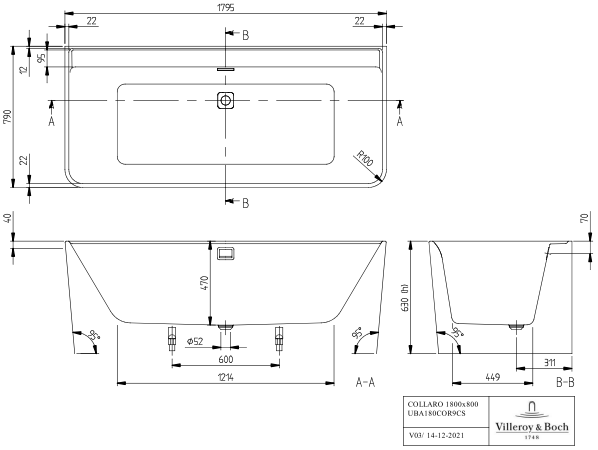
UBA180COR9CS00VE01