COLLARO VANITY UNIT ANGULAR

PRODUCT INFORMATION

Article title	Villeroy & Boch Collaro Vanity unit, 4 pull-out compartments, 1600 x 548 x 500 mm, Black Matt Lacquer / Black Matt Lacquer
Article number	C03100PD
Assembly / Assembly type	wall-mounted
Type of opening	4 pull-out compartments
Equipment	2 x wide glass drawer divider , 4 x narrow glass drawer divider 2 x accessory box L 4 x pull-out compartment with non-slip mat
Scope of delivery	1 x vanity unit , 1 x fastening set
Position of washbasin	washbasin on the middle
Depth in mm	500
Width in mm	1600
Height in mm	548
Collection	Collaro
Suitable for	selected vanity washbasins
Function	with SoftClosing
Material body	MDF
Surface of body	Paint
Material cover panel	MDF
Other material	Handle: aluminium
Other surfaces	Handle: Paint, matt
Shape	Angular
Colour designation	Black Matt Lacquer
Colour designation of cover panel	Black Matt Lacquer
Other colour designations	Handle: Black Matt Lacquer
With lighting	No
Smart home compatible	No

TECHNICAL DRAWINGS

C03100PD

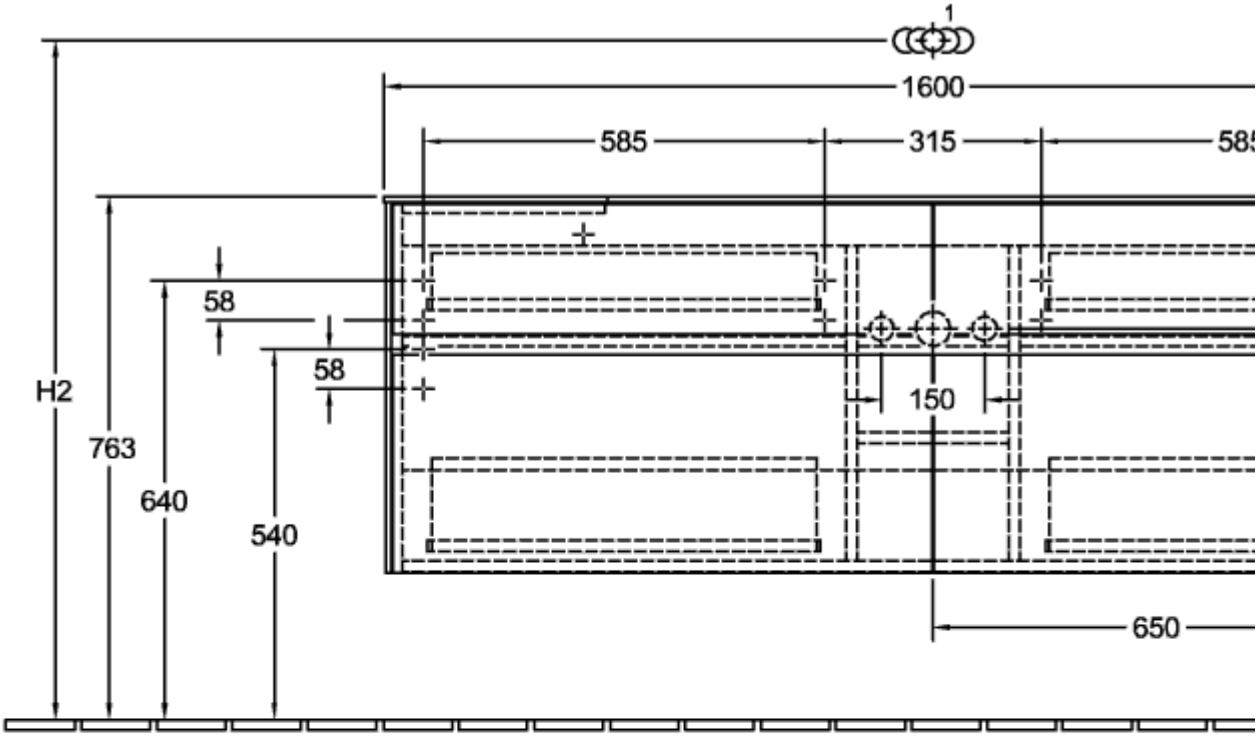

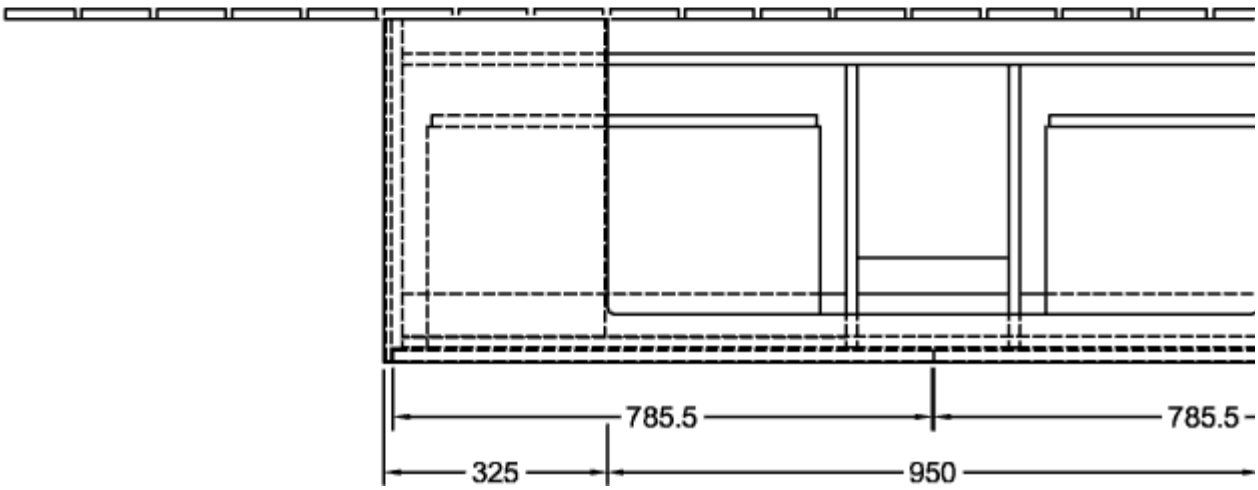

C03100PD

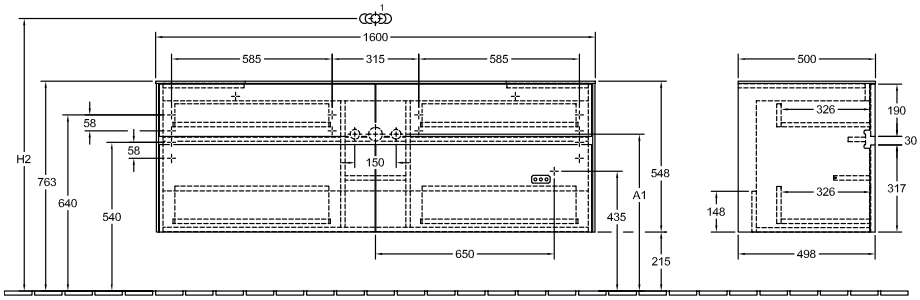

N L
220 - 240V

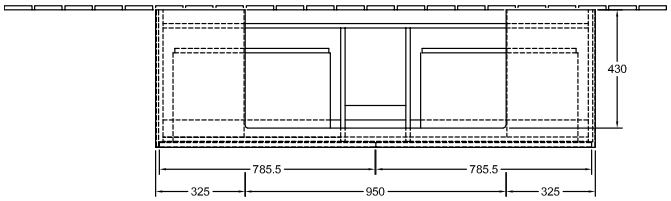

	1	2	H2	A1
4A33.1G		X		570
4168.1B/1H		X		605
4168.L1		X		605
4A22.1G/1H		X		645
4A22.1K		X		645
4A22.1F	X		1050	645
4A22.CH/CL		X		645
4A22.CG		X		645
4A22.CF	X		1050	645