LEGATO VANITY UNIT ANGULAR

PRODUCT INFORMATION

Article title	Villeroy & Boch Legato Vanity unit, with lighting, 1 pull-out compartment, 600 x 380 x 500 mm, Black Matt Lacquer / Black Matt Lacquer
Article number	B731L0PD
Assembly / Assembly type	wall-mounted
Type of opening	1 pull-out compartment
Equipment	1 x wide glass drawer divider , 2 x narrow glass drawer divider 1 x accessory box L 1 x pull-out compartment with non-slip mat
Scope of delivery	1 x vanity unit , 1 x fastening set
Position of washbasin	washbasin on the middle
Depth in mm	500
Width in mm	600
Height in mm	380
Collection	Legato
Suitable for	selected handwashbasins
Function	• with SoftClosing • with lighting
Material front	MDF
Surface of front	Paint
Material body	MDF
Surface of body	Paint
Material cover panel	Chipboard
Shape	Angular
Colour designation	Black Matt Lacquer
Colour designation of cover panel	Black Matt Lacquer
With lighting	Yes
Smart home compatible	No

TECHNICAL DRAWINGS

B731L0PD

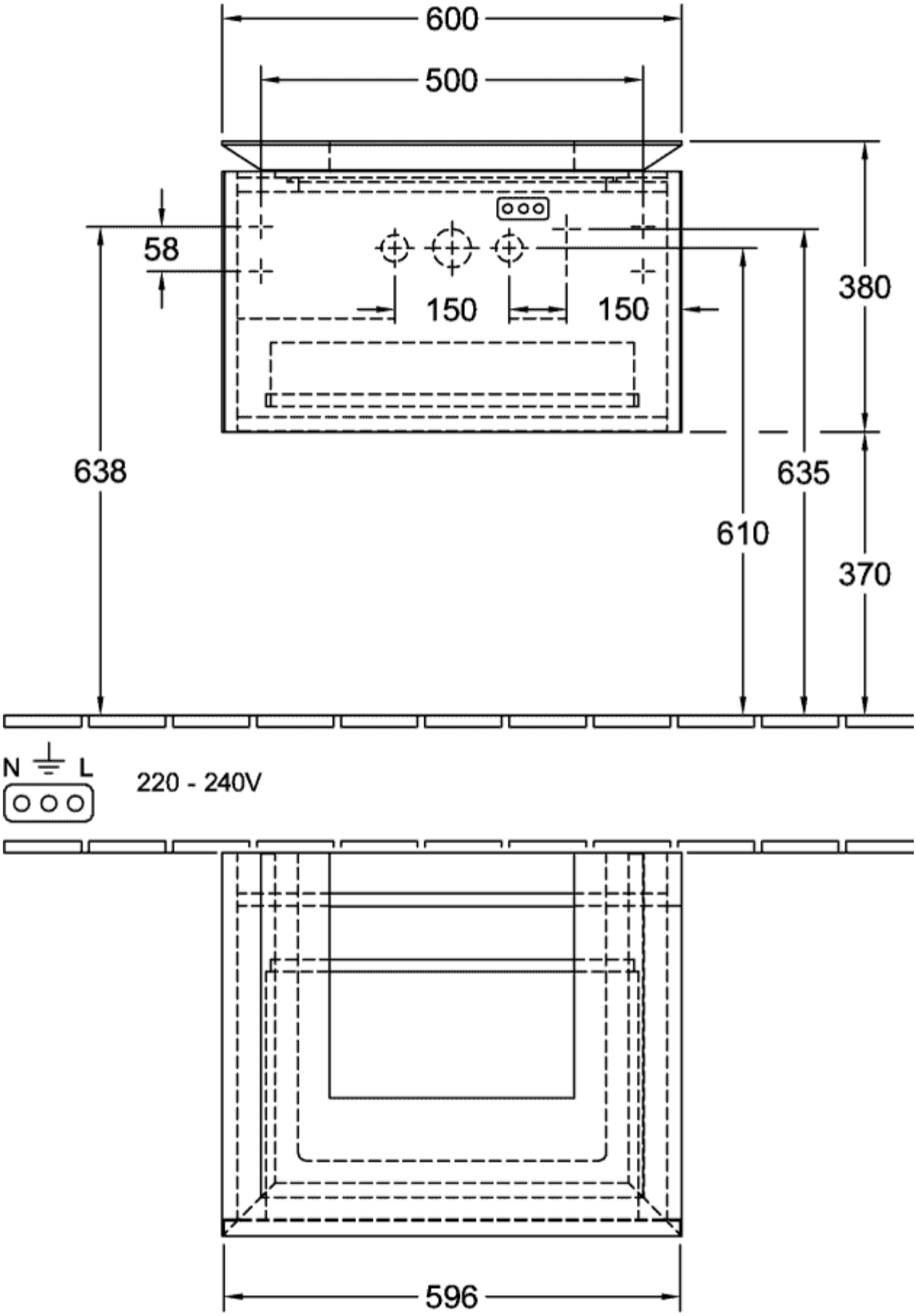

B731L0PD

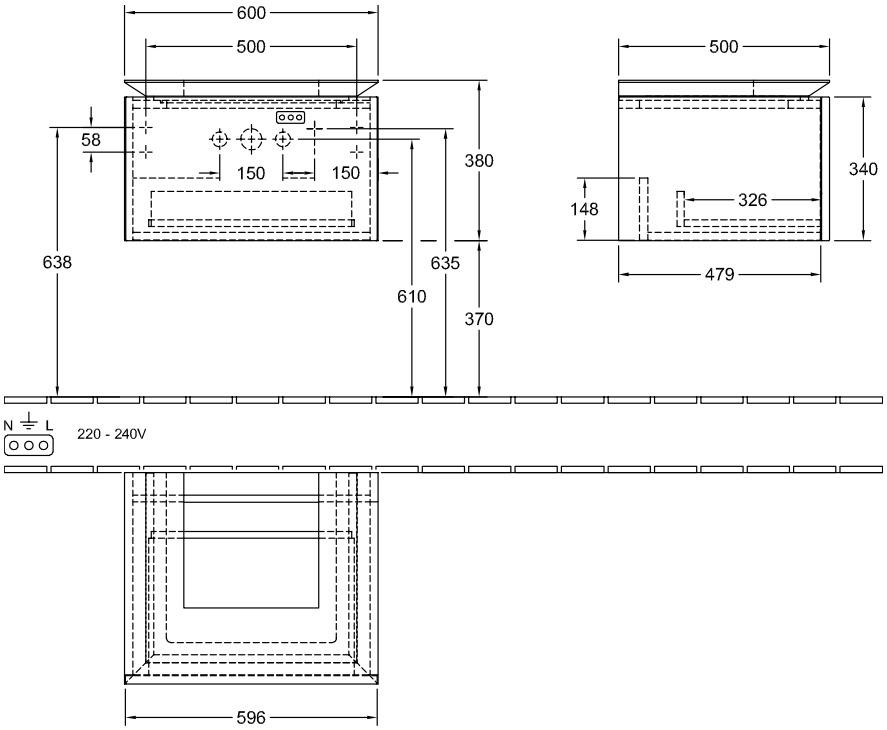
600
500
58
150
150
380
638
635
610
370
N
L
220 - 240V
596
500
340
148
326
479