SUBWAY 2.0 VANITY UNIT ANGULAR

PRODUCT INFORMATION

Article title	Villeroy & Boch Subway 2.0 Vanity unit, 2 pull-out compartments, 440 x 590 x 351 mm, White Wood
Article number	A90600E8
Assembly / Assembly type	wall-mounted
Type of opening	2 pull-out compartments
Equipment	1 x accessory box L , 2 x pull-out compartment
Scope of delivery	1 x vanity unit , 1 x fastening set
Position of washbasin	washbasin on the middle
Depth in mm	351
Width in mm	440
Height in mm	590
Collection	Subway 2.0
Suitable for	selected handwashbasins
Function	with SoftClosing
Material front	MDF
Surface of front	Film
Material body	Chipboard
Surface of body	Direct coating
Other material	Handle: Plastic
Other surfaces	Handle: Paint, matt
Shape	Angular
Colour designation	White Wood
Other colour designations	Handle: matt silver-coloured
With lighting	No
Smart home compatible	No

TECHNICAL DRAWINGS

A90600E8

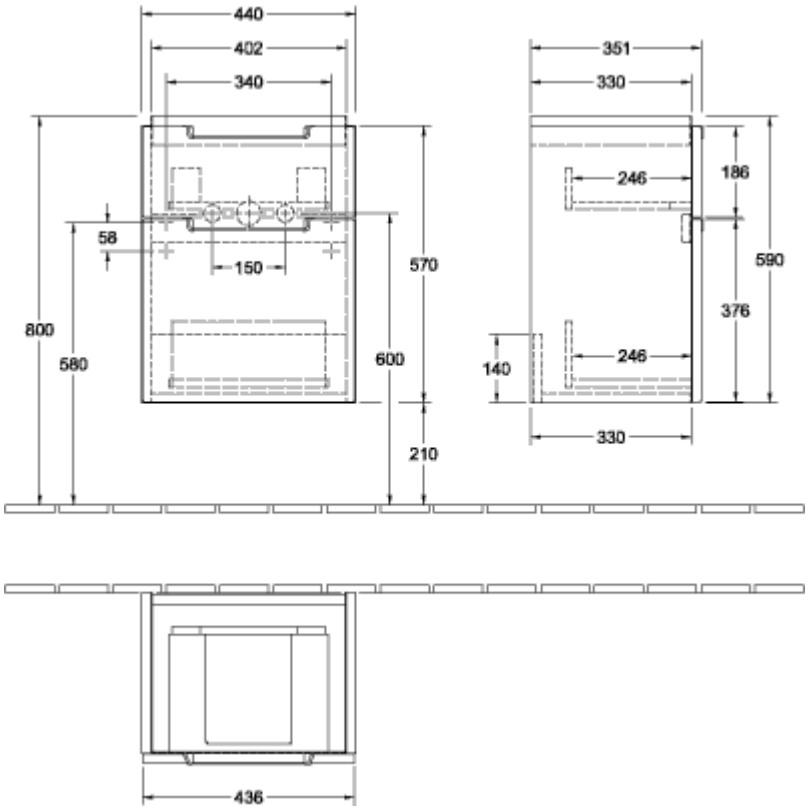

A90600E8

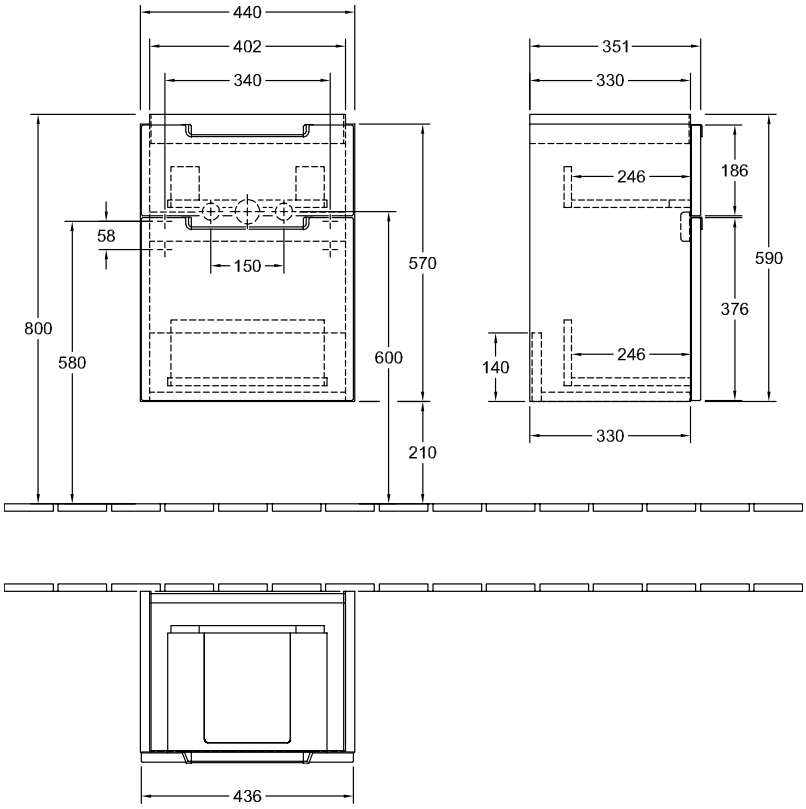
440
402
340
351
330
246
186
58
150
570
590
376
800
580
600
140
246
330
210
436