SUBWAY 2.0 SIDE CABINET ANGULAR

PRODUCT INFORMATION

Article title	Villeroy & Boch Subway 2.0 Side cabinet, 1 door, 2 drawers, 356 x 857 x 370 mm, Black Matt Lacquer / Glass White
Article number	A7120SPD
Assembly / Assembly type	wall-mounted
Type of opening	1 door, 2 drawers
Door hinge	hinges on left
Equipment	2 x pull-out compartment , 1 x door 1 x shelf
Scope of delivery	1 x side cabinet , 1 x fastening set
Depth in mm	370
Width in mm	356
Height in mm	857
Collection	Subway 2.0
Function	with SoftClosing
Material front	MDF
Surface of front	Paint
Material body	MDF
Surface of body	Paint
Material cover panel	Glass
Other material	Handle: Plastic
Other surfaces	Handle: Paint, matt
Shape	Angular
Colour designation	Black Matt Lacquer
Colour designation of cover panel	Glass White
Other colour designations	Handle: matt silver-coloured
With lighting	No
Smart home compatible	No

TECHNICAL DRAWINGS

A7120SPD

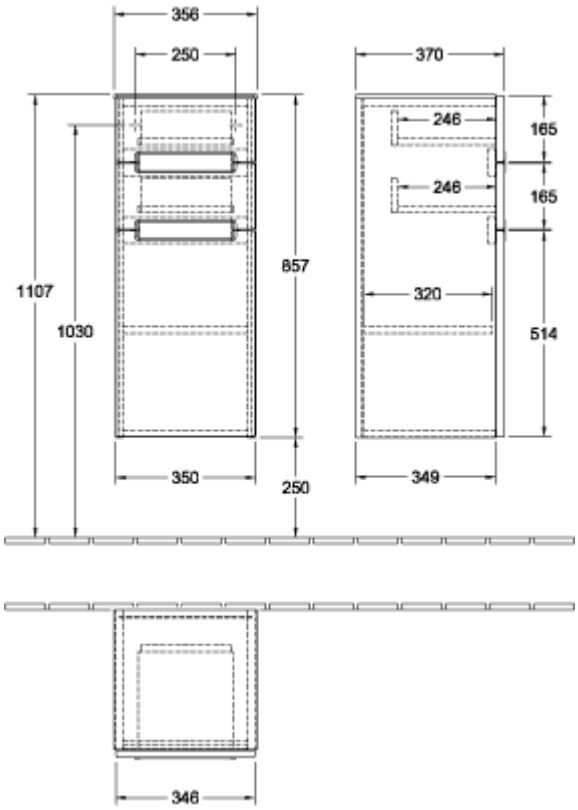

A7120SPD

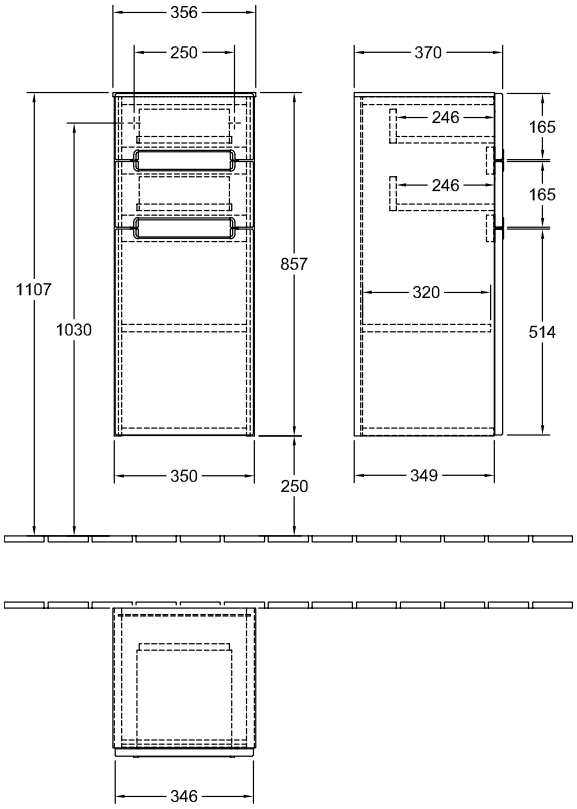
356
250
370
246
165
246
165
857
1107
320
1030
514
350
250
349
346