# MORE TO SEE 14 MIRROR RECTANGLE

## PRODUCT INFORMATION

| | |
|---|---|
| Article title | Villeroy & Boch More To See 14 Mirror, with lighting, 1600 x 750 x 47 mm |
| Article number | A4291600 |
| Assembly / Assembly type | wall-mounted |
| Scope of delivery | 1 x mirror , 1 x fastening set |
| Depth in mm | 47 |
| Width in mm | 1600 |
| Height in mm | 750 |
| Collection | More To See 14 |
| Function | with lighting |
| Material | Glass |
| Shape | Rectangle |
| With lighting | Yes |
| Smart home compatible | No |

## TECHNICAL DRAWINGS

### A4291600

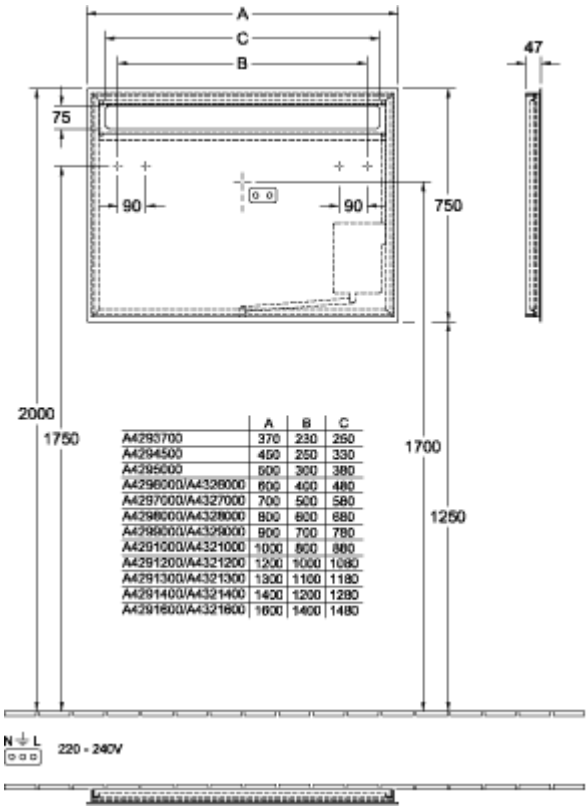


| | A | B | C |
|---|---|---|---|
| A4293700 | 370 | 230 | 250 |
| A4294500 | 450 | 250 | 330 |
| A4295000 | 500 | 300 | 380 |
| A4296000/A4328000 | 600 | 400 | 480 |
| A4297000/A4327000 | 700 | 500 | 580 |
| A4298000/A4328000 | 800 | 600 | 680 |
| A4299000/A4329000 | 900 | 700 | 780 |
| A4291000/A4321000 | 1000 | 800 | 880 |
| A4291200/A4321200 | 1200 | 1000 | 1080 |
| A4291300/A4321300 | 1300 | 1100 | 1180 |
| A4291400/A4321400 | 1400 | 1200 | 1280 |
| A4291600/A4321600 | 1600 | 1400 | 1480 |

# A4291600

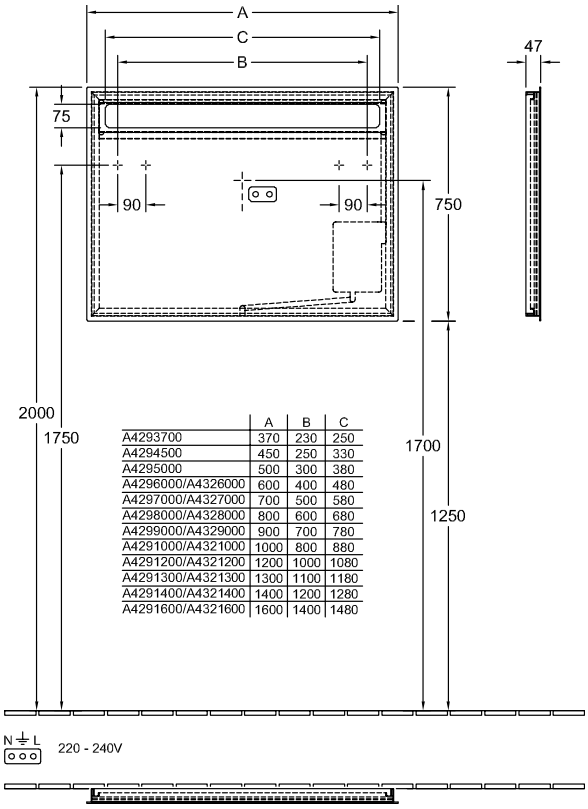


| | A | B | C |
|---|---|---|---|
| A4293700 | 370 | 230 | 250 |
| A4294500 | 450 | 250 | 330 |
| A4295000 | 500 | 300 | 380 |
| A4296000/A4326000 | 600 | 400 | 480 |
| A4297000/A4327000 | 700 | 500 | 580 |
| A4298000/A4328000 | 800 | 600 | 680 |
| A4299000/A4329000 | 900 | 700 | 780 |
| A4291000/A4321000 | 1000 | 800 | 880 |
| A4291200/A4321200 | 1200 | 1000 | 1080 |
| A4291300/A4321300 | 1300 | 1100 | 1180 |
| A4291400/A4321400 | 1400 | 1200 | 1280 |
| A4291600/A4321600 | 1600 | 1400 | 1480 |