SUBWAY CISTERN

PRODUCT INFORMATION

Article title	Villeroy & Boch Subway Cistern, water inlet from the sides or rear, White Alpin
Article number	77231101
Scope of delivery	1 x cistern
Depth in mm	155
Width in mm	388
Height in mm	385
Collection	Subway
Material	Sanitary ceramics
Colour name	White Alpin
Other material	Push button: ABS Flushing mechanism: Plastic
Other surfaces	Push button: chrome, glossy, Flushing mechanism: glossy
Colour designation	White Alpin
Other colour designations	Push button: Chrome, Flushing mechanism: White Alpin

TECHNICAL DRAWINGS

77231101

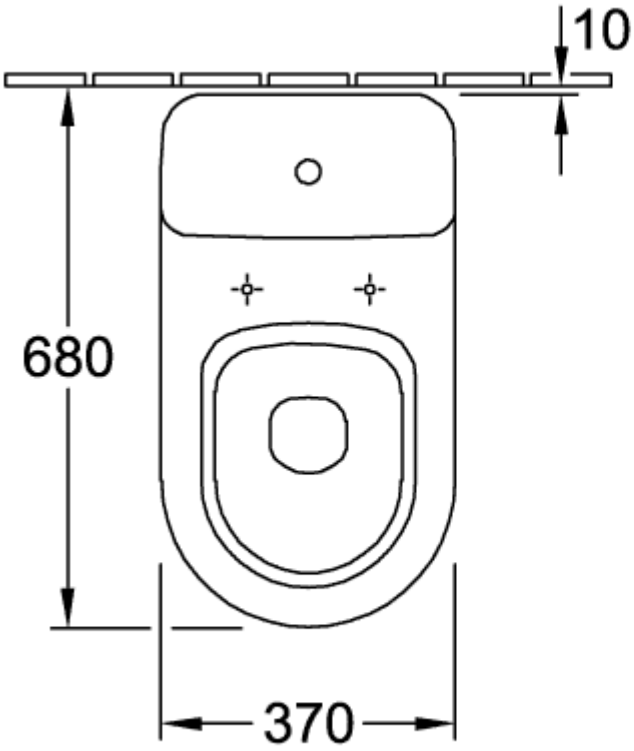

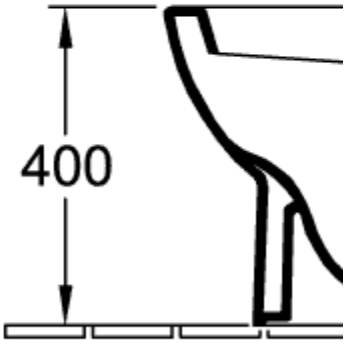

* 8701 00 = 165 -

* 8711 00 = 75 -

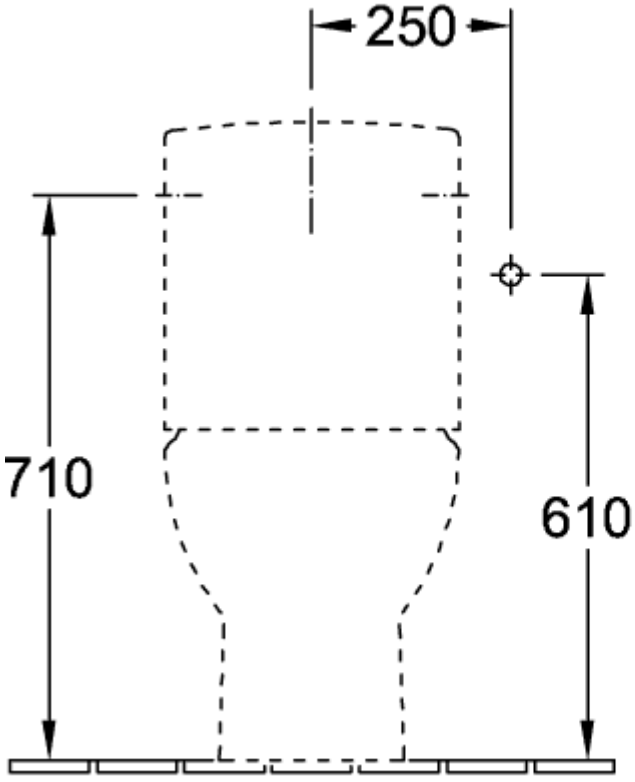

7723 11

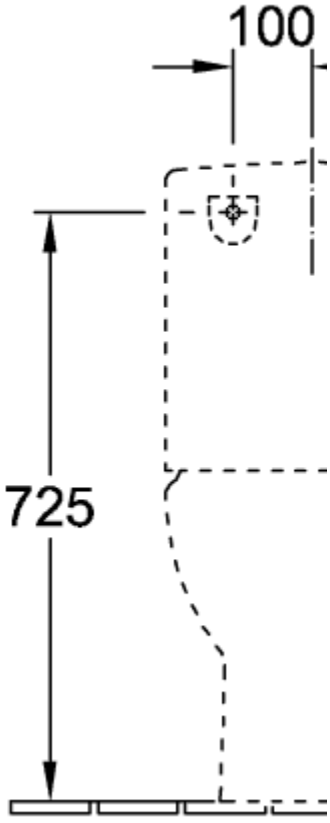

77231101

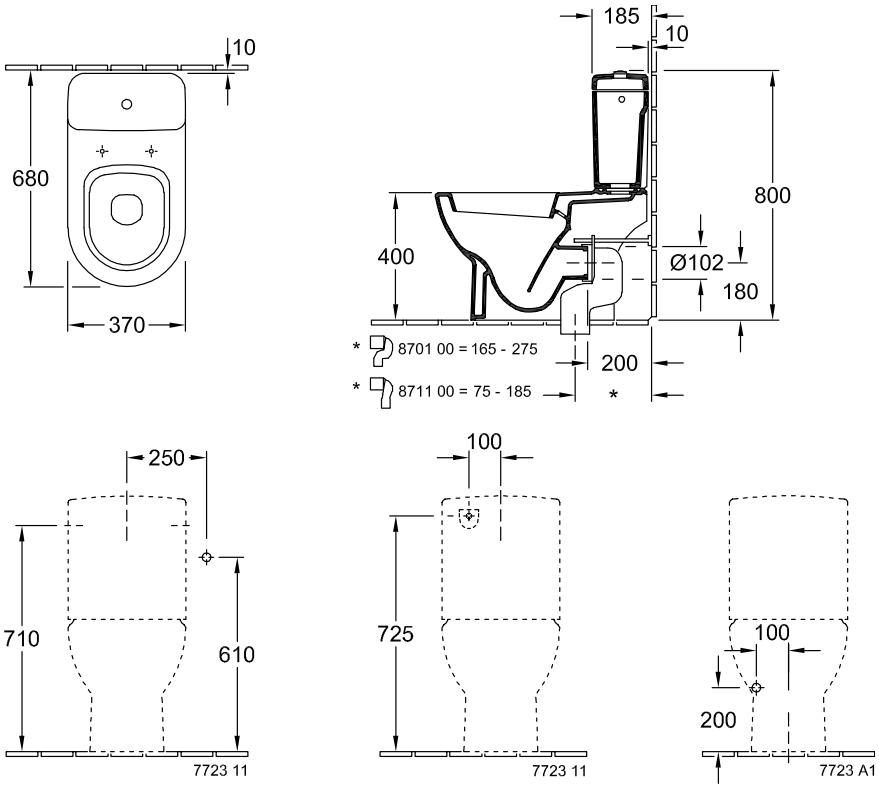
10
680
370
185
10
800
400
Ø102
180
* 8701 00 = 165 - 275
* 8711 00 = 75 - 185
200
*
250
710
610
7723 11
100
725
7723 11
100
200
7723 A1

77231101

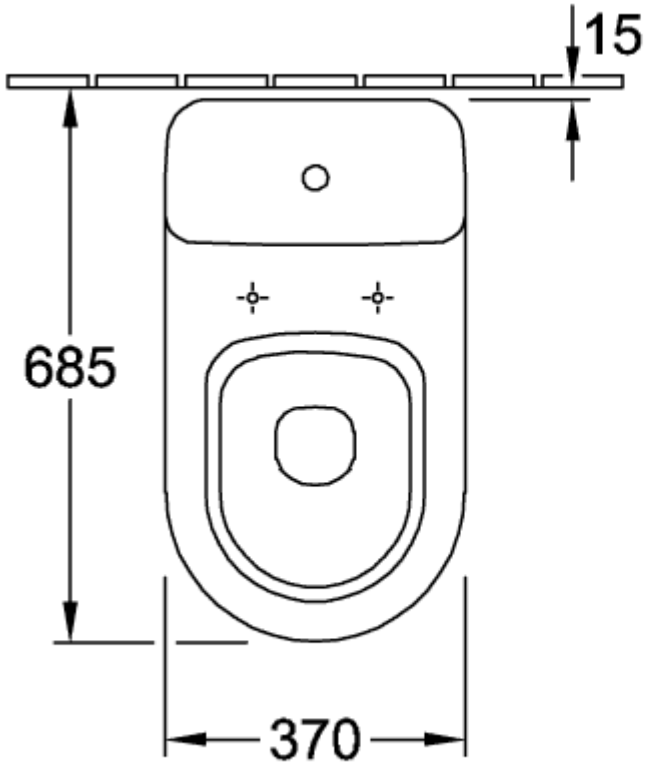

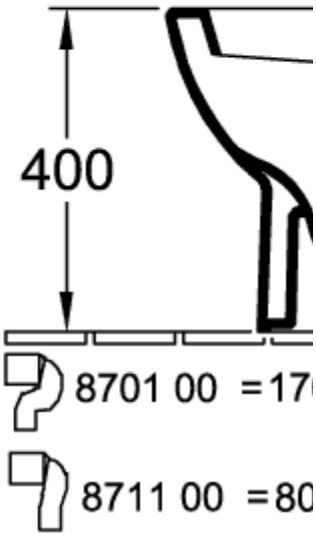

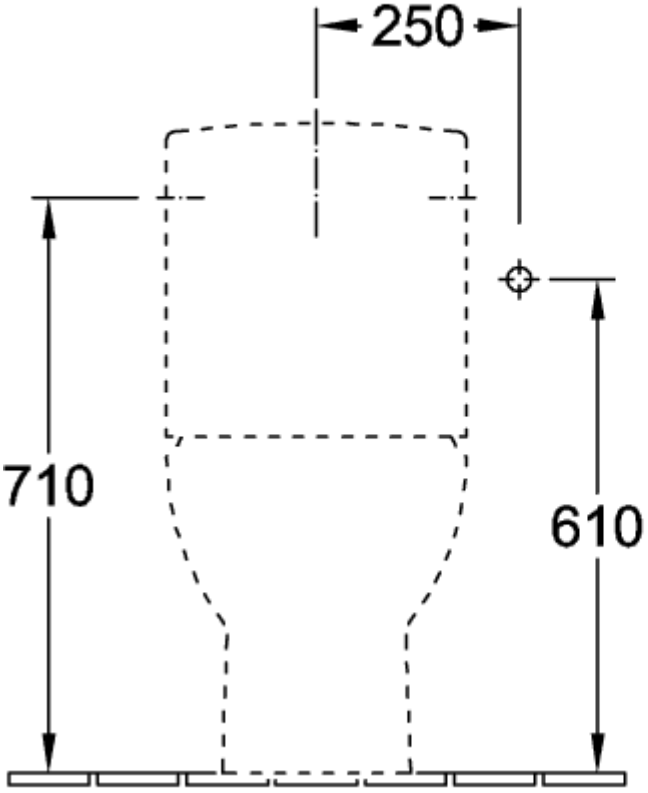

7723 11

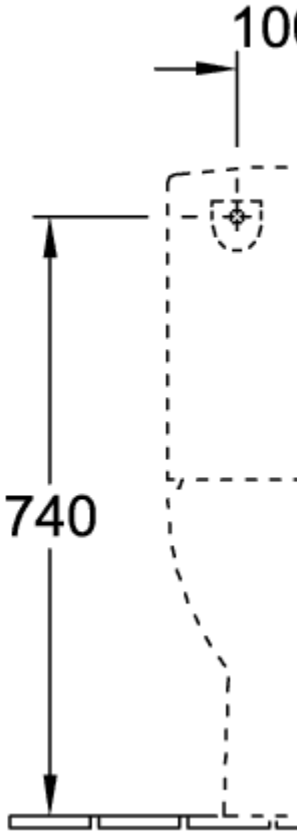

7723 11

77231101

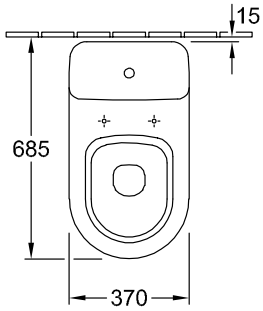

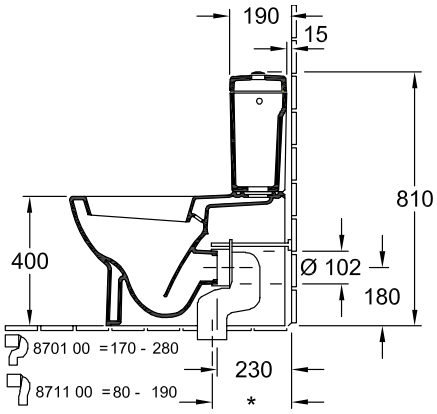

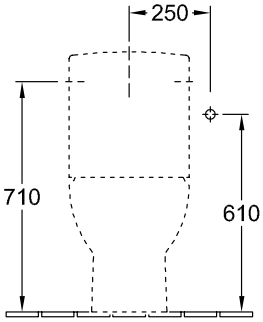

7723 11

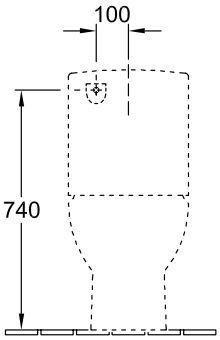

7723 11

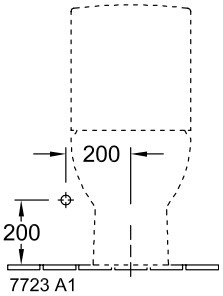

7723 A1

77231101

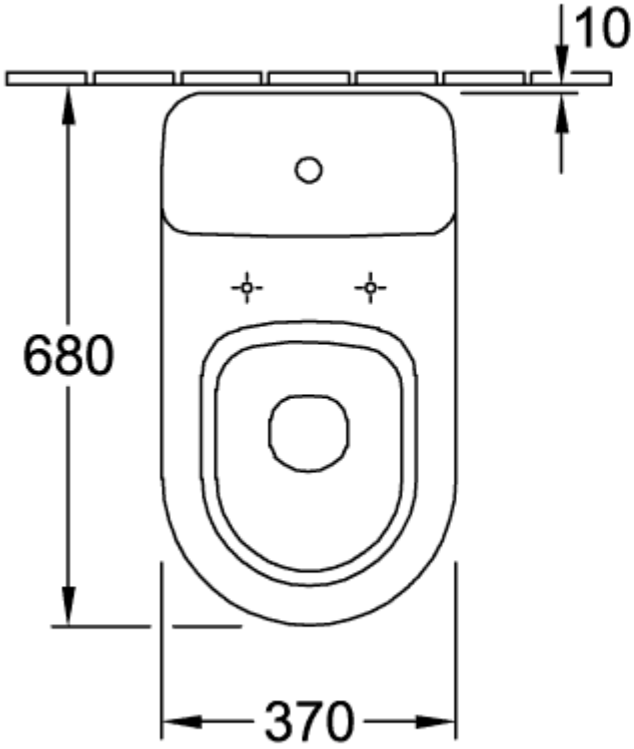
10
680
370

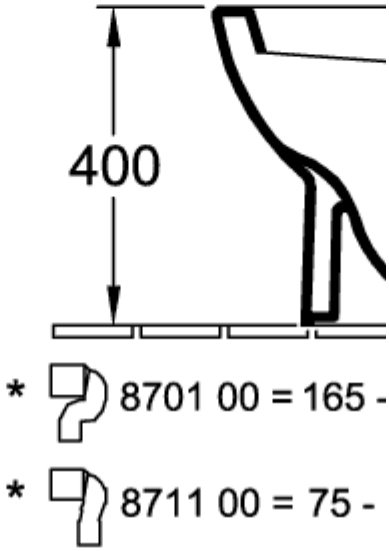
400
* 8701 00 = 165 -
* 8711 00 = 75 -

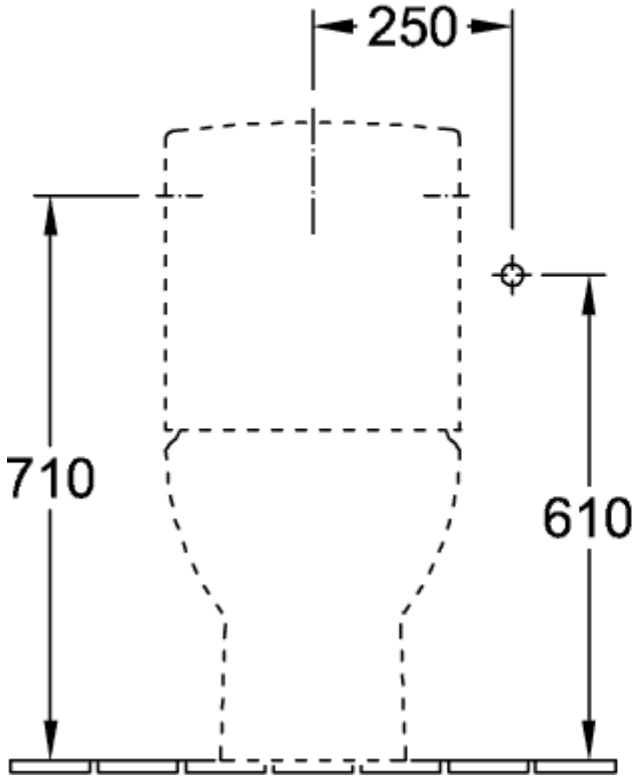
250
710
610

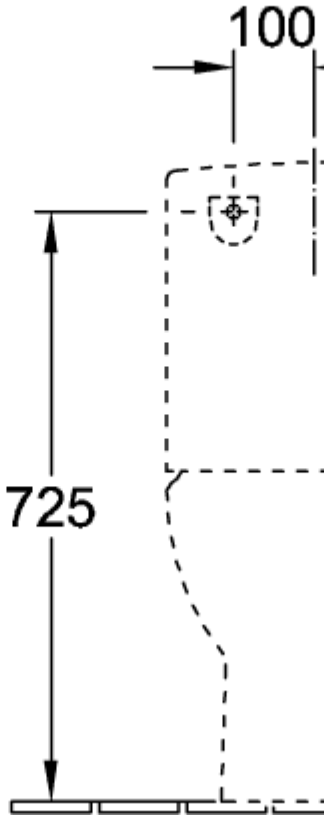
100
725

77231101

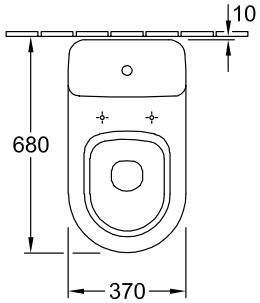
10
680
370

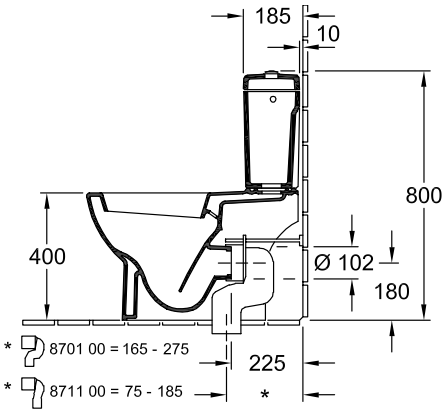
185
10
800
400
Ø 102
180
* 8701 00 = 165 - 275
* 8711 00 = 75 - 185
225
*

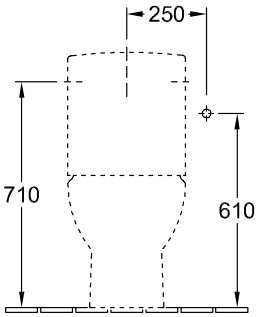
250
710
610

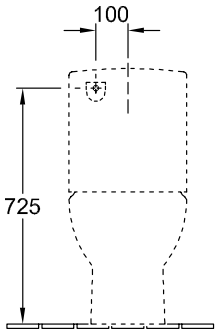
100
725

77231101

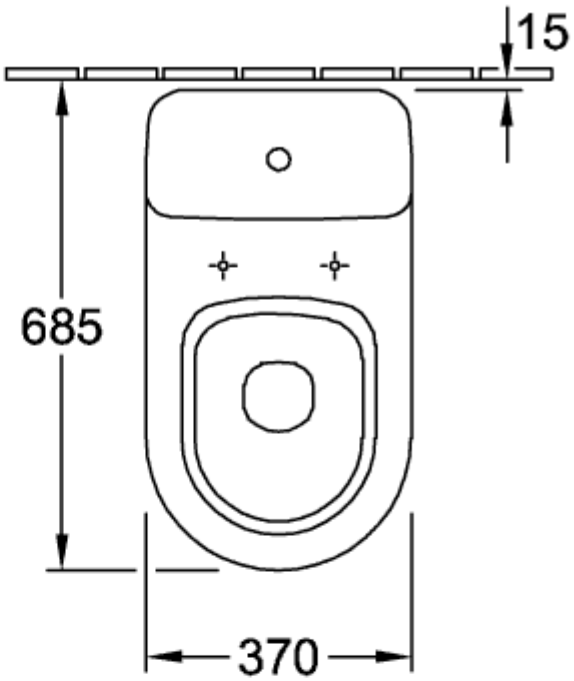

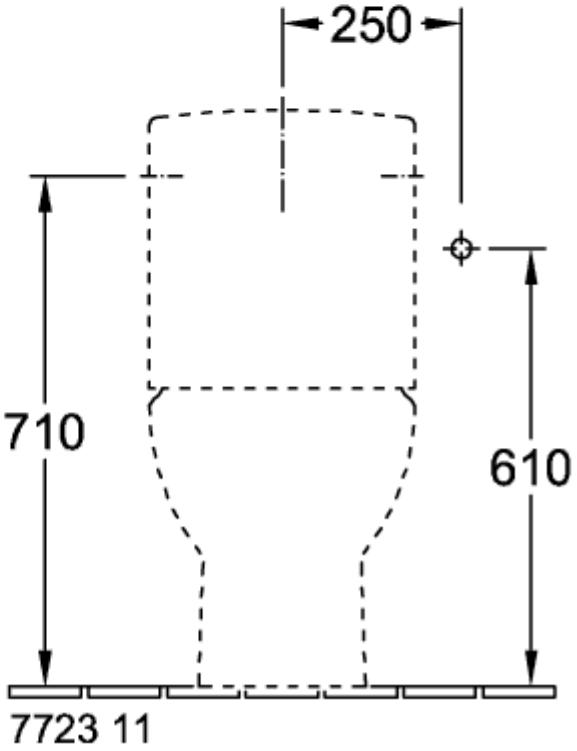

77231101

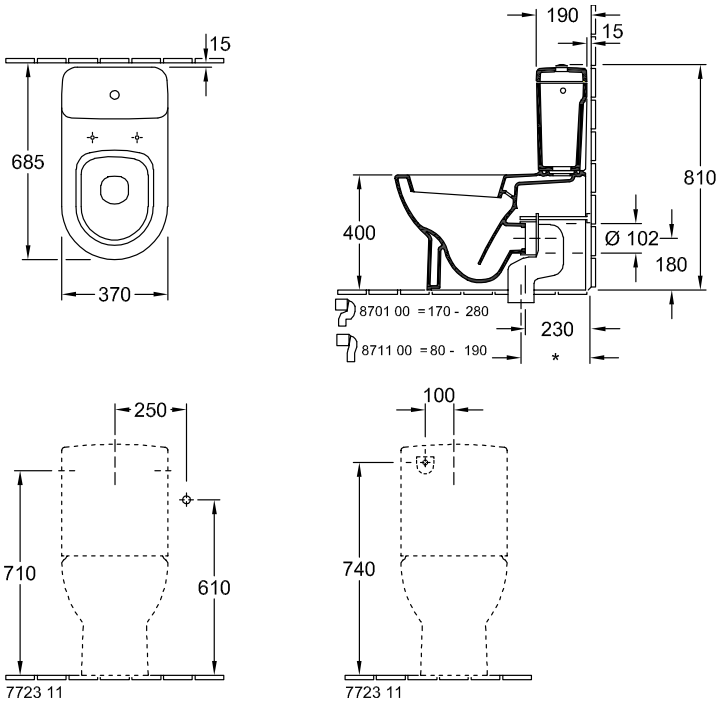
15
685
370
190
15
810
400
Ø 102
180
8701 00 = 170 - 280
8711 00 = 80 - 190
230
*
250
710
610
7723 11
100
740
7723 11