# VICARE WASHBASIN VICARE RECTANGLE

## PRODUCT INFORMATION

| | |
|---|---|
| Article title | Villeroy & Boch ViCare Washbasin ViCare, 600 x 490 x 180 mm, White Alpin, without overflow |
| Article number | 71196101 |
| Assembly / Assembly type | wall-mounted |
| Scope of delivery | 1 x washbasin |
| Depth in mm | 490 |
| Width in mm | 600 |
| Height in mm | 180 |
| Interior depth | 140 |
| Collection | ViCare |
| Tap fitting / Tap hole information | Please note: unclosable outlet valve must be used with models without overflow |
| Suitable for | 3-hole mixer, Accessible application |
| Material | Sanitary ceramics |
| surface | glossy |
| Colour name | White Alpin |
| With overflow | No |
| Shape | Rectangle |
| Colour designation | White Alpin |
| Antibacterial surface (with AntiBac) | No |
| Easy surface cleaning (CeramicPlus) | No |
| Number of tap holes punched through | 1 |
| Number of tap holes pre-drilled | 2 |
| Number of bowls | 1 |

## TECHNICAL DRAWINGS

**71196101**

DE

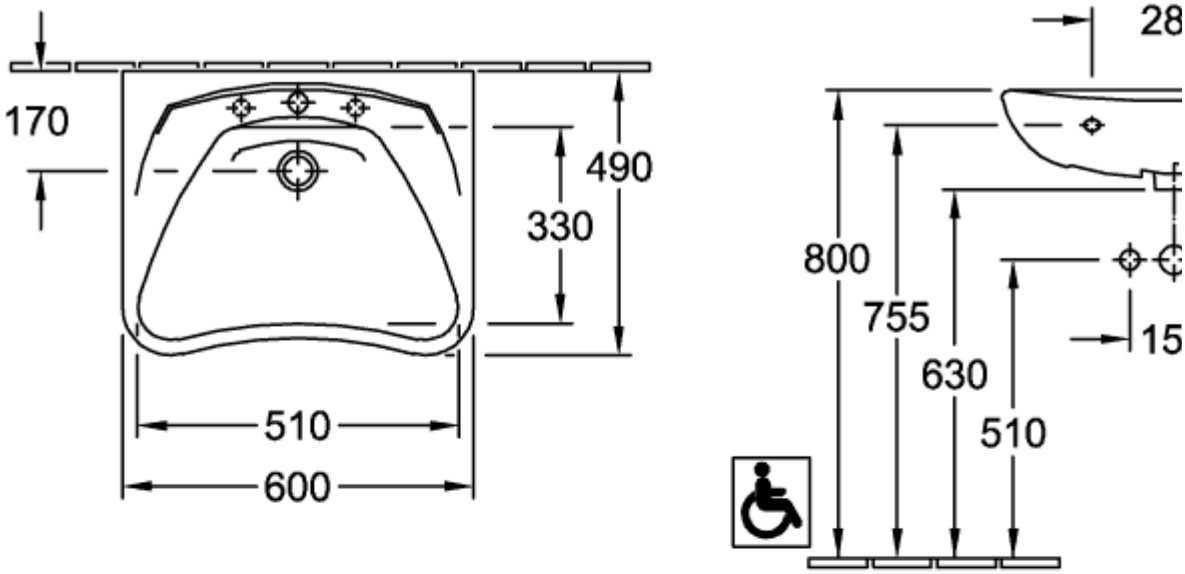


FR+

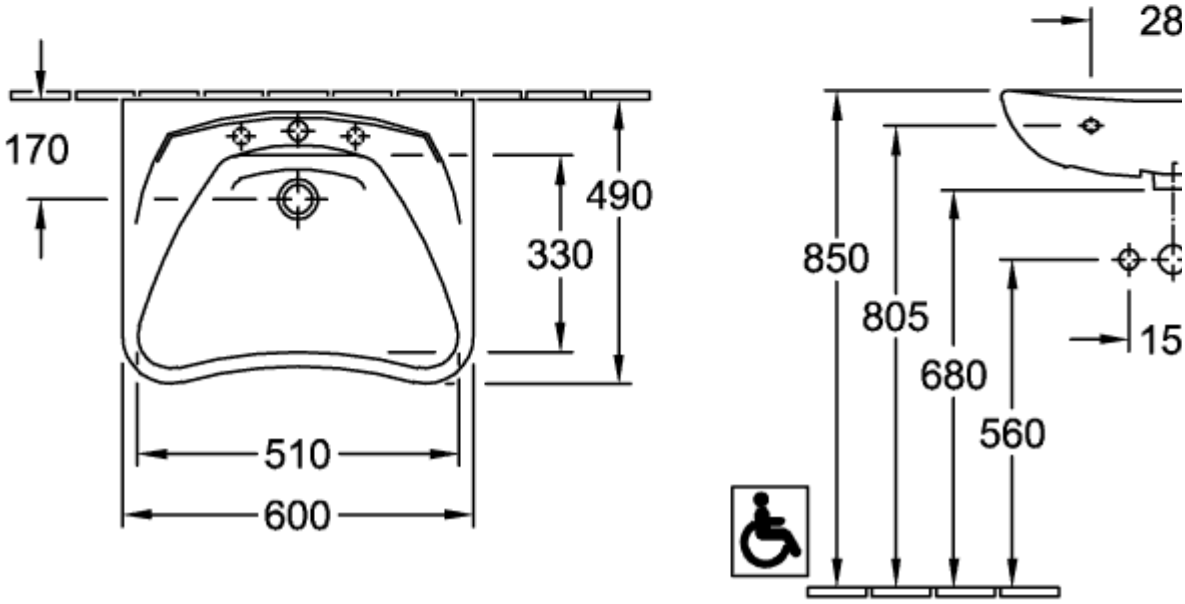

# 71196101

DE

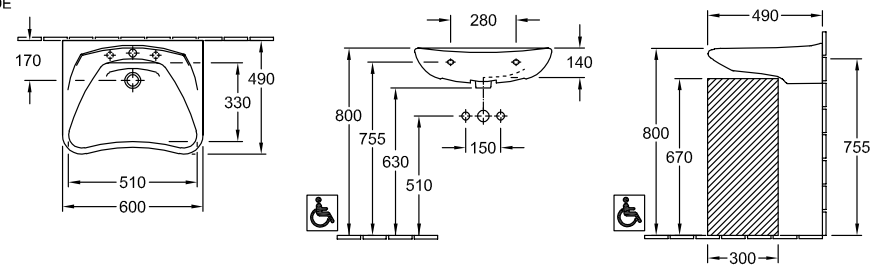

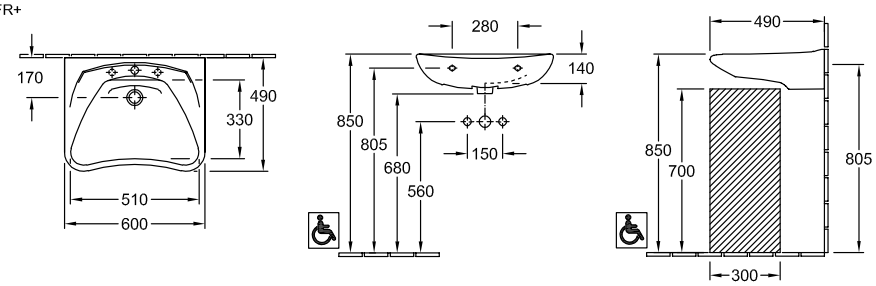
FR+