HOMMAGE WASHBASIN RECTANGLE

PRODUCT INFORMATION

Article title	Villeroy & Boch Hommage Washbasin, 750 x 580 x 200 mm, White Alpin CeramicPlus, with overflow
Article number	7101A1R1
Assembly / Assembly type	wall-mounted
Scope of delivery	1 x washbasin
Depth in mm	580
Width in mm	750
Height in mm	200
Interior depth	160
Collection	Hommage
Suitable for	3-hole mixer, Matching Villeroy&Boch furniture
Material	Sanitary ceramics
surface	glossy
Colour name	White Alpin CeramicPlus
With overflow	Yes
Shape	Rectangle
Colour designation	White Alpin
Antibacterial surface (with AntiBac)	No
Easy surface cleaning (CeramicPlus)	Yes
Number of tap holes punched through	3
Number of bowls	1

TECHNICAL DRAWINGS

7101A1R1

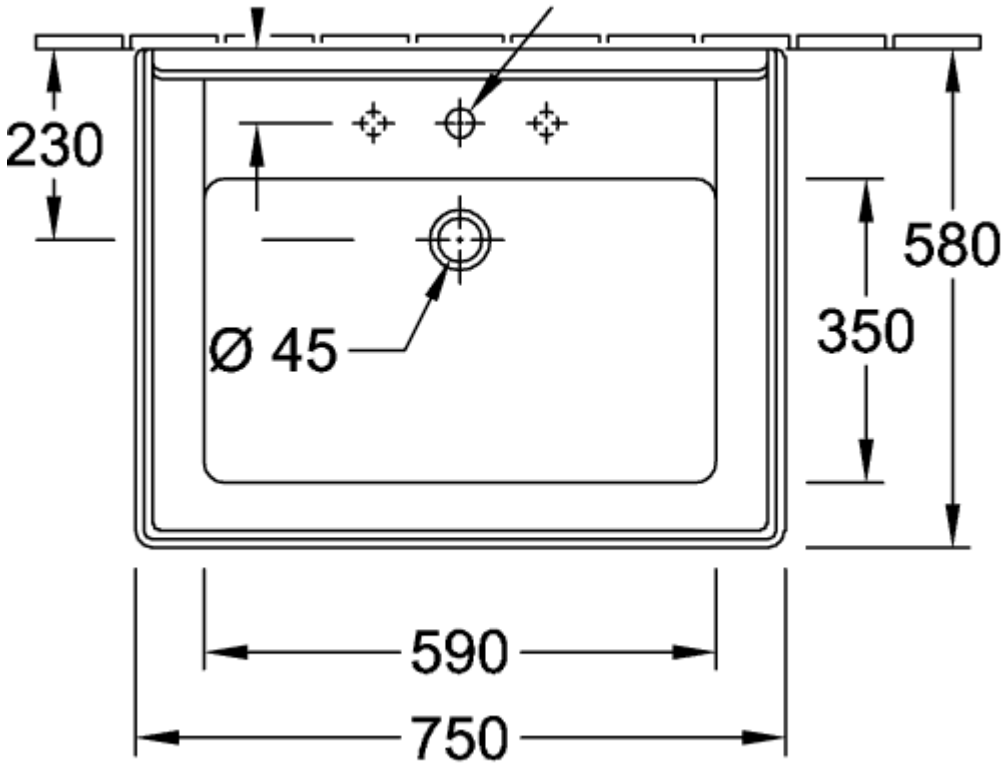
230
580
350
Ø 45
590
750

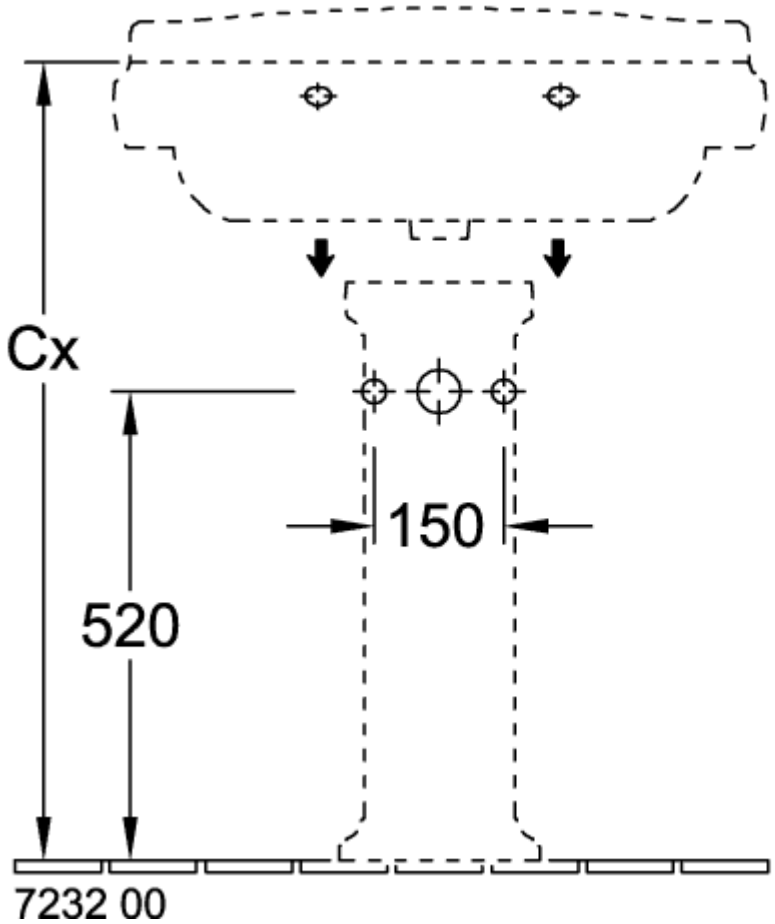
Cx
150
520
7232 00

7101A1R1

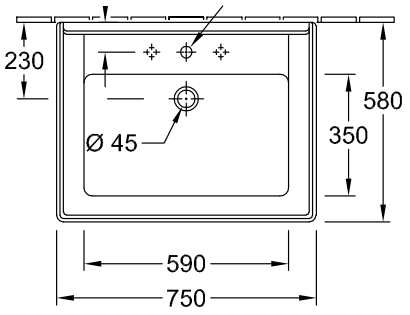
230
580
350
Ø 45
590
750

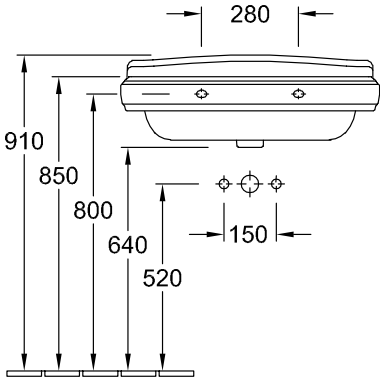
280
910
850
800
640
520
150

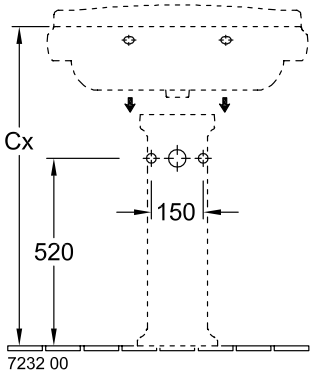
Cx
150
520
7232 00