VENTICELLO SIPHONIC URINAL RECTANGLE

PRODUCT INFORMATION

Article title	Villeroy & Boch Venticello Siphonic urinal, without cover, concealed water inlet, 285 x 320 mm, Graphite CeramicPlus
Article number	5504R0i4
Assembly / Assembly type	wall-mounted
Scope of delivery	1 x siphonic urinal , 1 x fastening set
Depth in mm	320
Width in mm	285
Height in mm	545
Collection	Venticello
Suitable for	Installation without lid
Flush volume l	1,0 / l
Material	Sanitary ceramics
surface	matt
Colour name	Graphite CeramicPlus
Shape	Rectangle
Colour designation	Graphite
Easy surface cleaning (CeramicPlus)	Yes
Rimless (mit DirectFlush)	Yes
Flush type	Siphonic urinal
Outlet / outlet	Outlet may be concealed depending on the type of extractor section

TECHNICAL DRAWINGS

5504R0i4

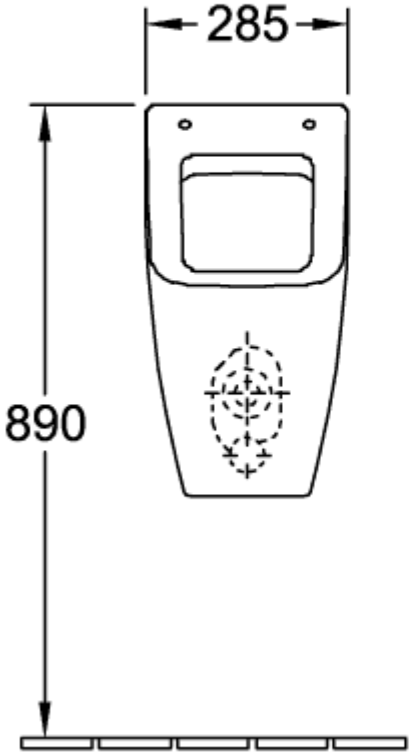
285
890

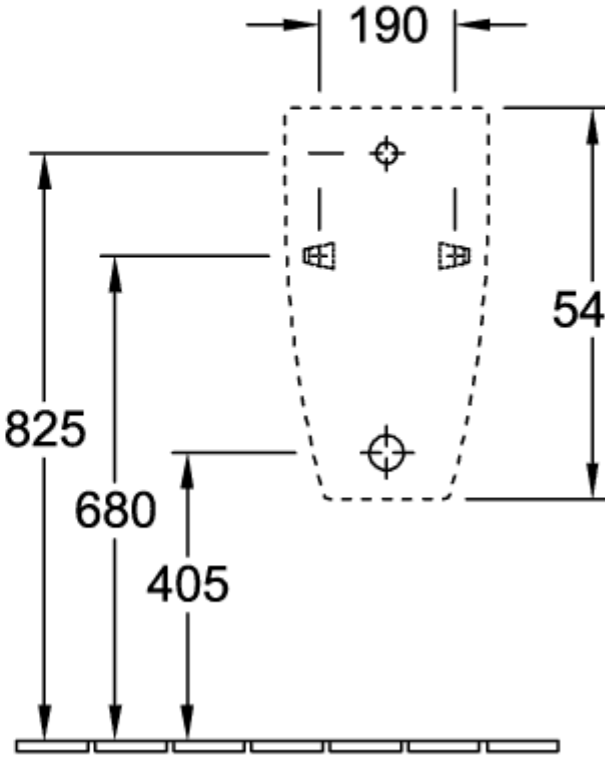
190
54
825
680
405

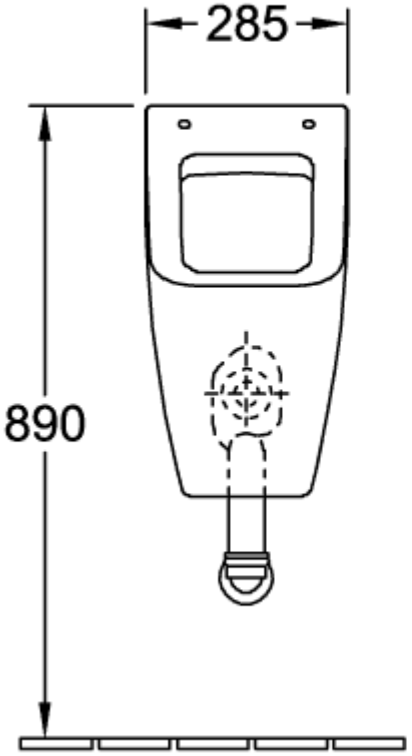
285
890

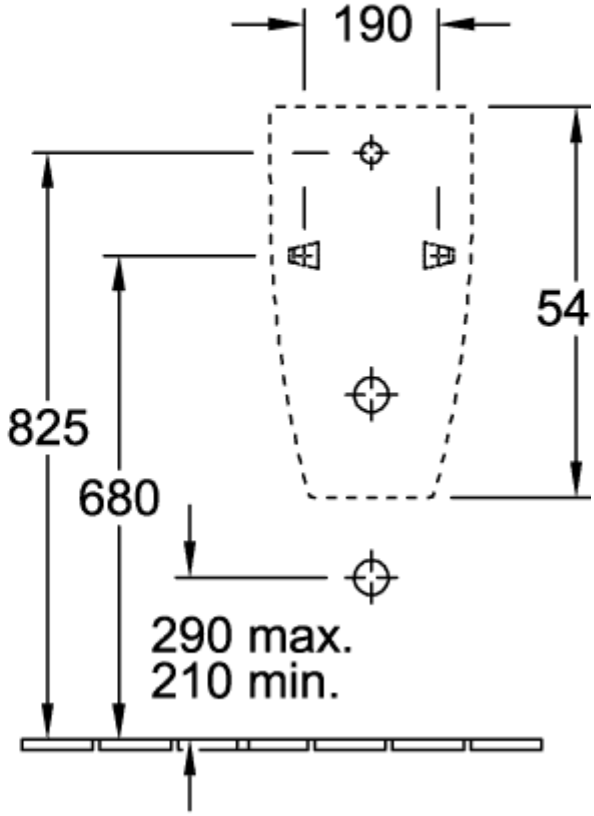
190
54
825
680
290 max.
210 min.

5504R0i4

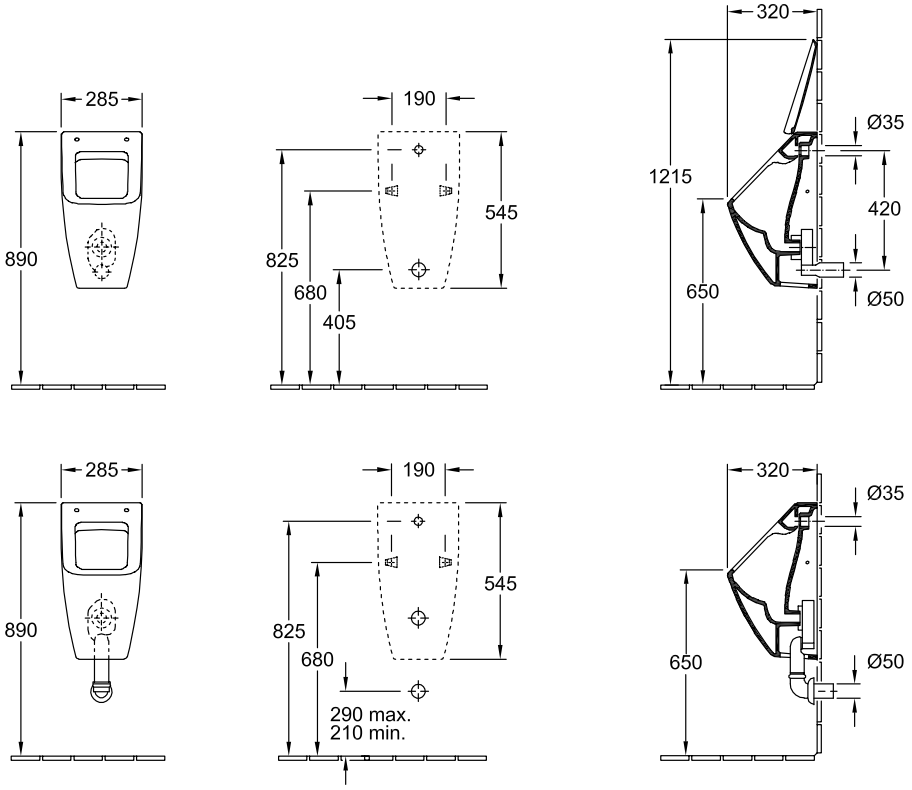
285
890
190
545
825
680
405
320
1215
650
Ø35
420
Ø50
285
890
190
545
825
680
290 max.
210 min.
320
650
Ø35
Ø50