MEMENTO 2.0 WASHBASIN RECTANGLE

PRODUCT INFORMATION

Article title	Villeroy & Boch Memento 2.0 Washbasin, 500 x 420 x 140 mm, White Alpin, with overflow, ground
Article number	4A225G01
Assembly / Assembly type	wall-mounted
Scope of delivery	1 x washbasin , 1 x cut-out template
Depth in mm	420
Width in mm	500
Height in mm	140
Interior depth	90
Collection	Memento 2.0
Suitable for	3-hole mixer, Matching Villeroy&Boch furniture
Material	TitanCeram
surface	glossy
Colour name	White Alpin
With overflow	Yes
Shape	Rectangle
Colour designation	White Alpin
Antibacterial surface (with AntiBac)	No
Easy surface cleaning (CeramicPlus)	No
Number of tap holes punched through	1
Number of tap holes pre-drilled	2
Underside of washbasin	ground
Number of bowls	1

TECHNICAL DRAWINGS

4A225G01

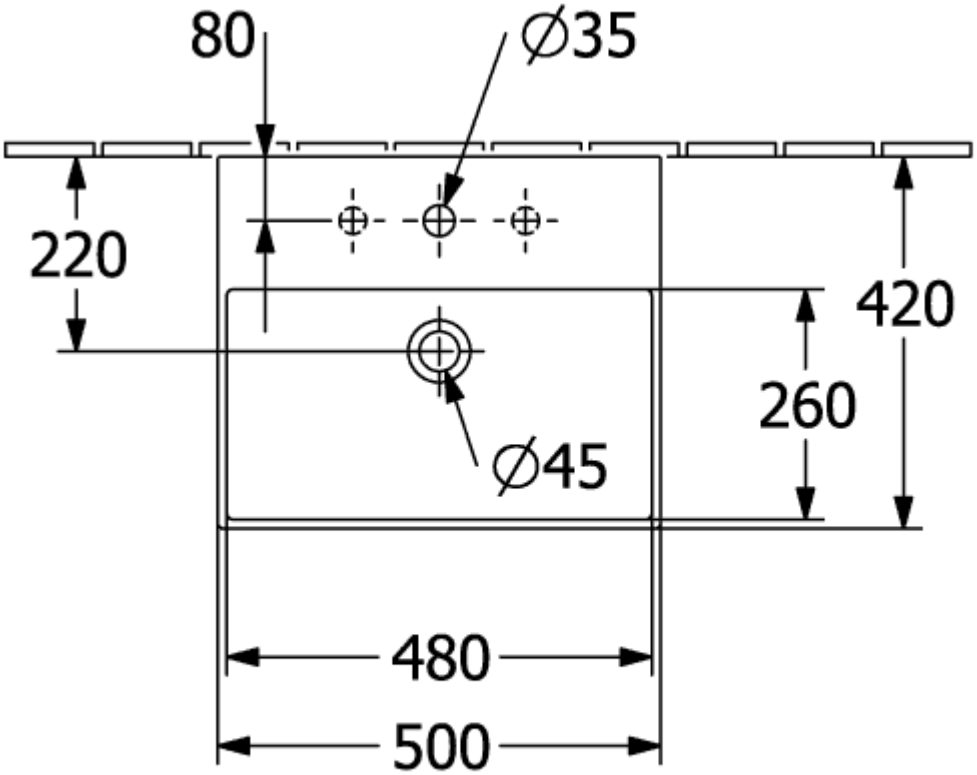
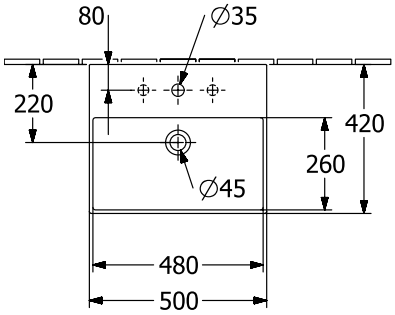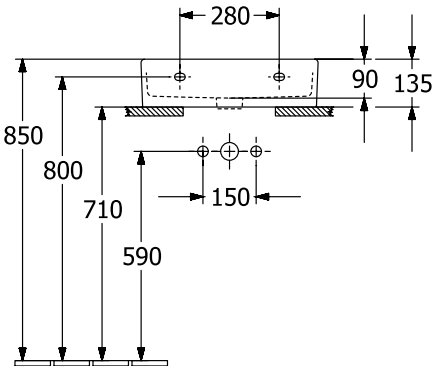
4A225G01