COLLARO HANDWASHBASIN RECTANGLE

PRODUCT INFORMATION

Article title	Villeroy & Boch Collaro Handwashbasin, 500 x 400 x 150 mm, White Alpin, with overflow, ground
Article number	43345G01
Assembly / Assembly type	wall-mounted
Scope of delivery	1 x handwashbasin
Depth in mm	400
Width in mm	500
Height in mm	150
Interior depth	85
Collection	Collaro
Suitable for	1-hole mixer, Matching Villeroy&Boch furniture
Material	TitanCeram
surface	glossy
Colour name	White Alpin
With overflow	Yes
Shape	Rectangle
Colour designation	White Alpin
Antibacterial surface (with AntiBac)	No
Easy surface cleaning (CeramicPlus)	No
Number of tap holes punched through	1
Underside of washbasin	ground
Number of bowls	1

TECHNICAL DRAWINGS

43345G01

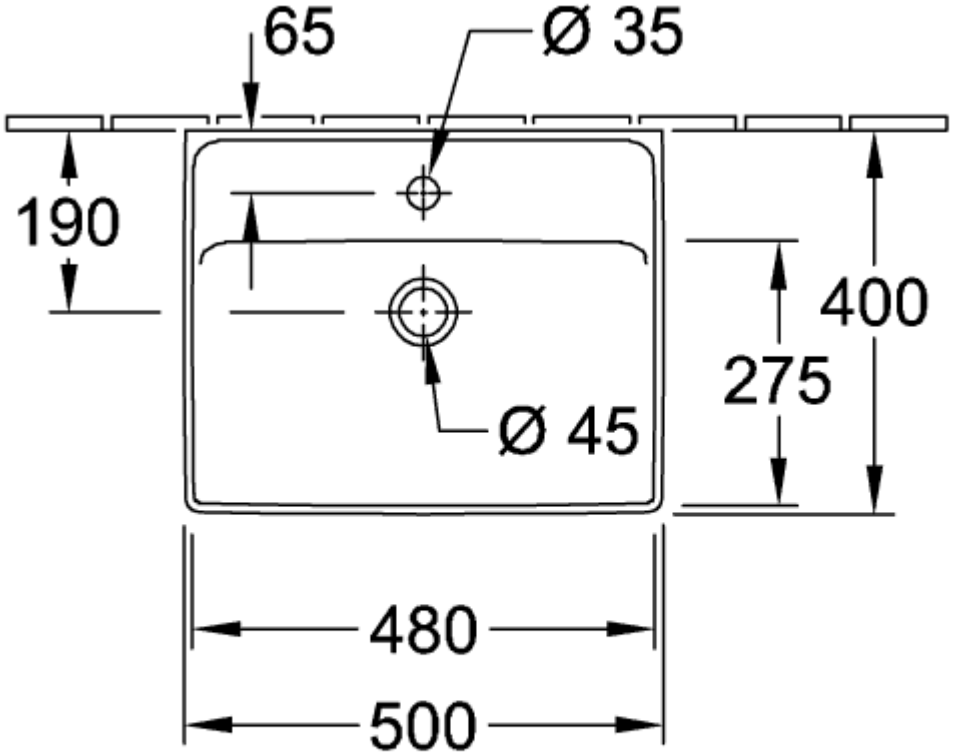

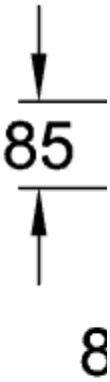
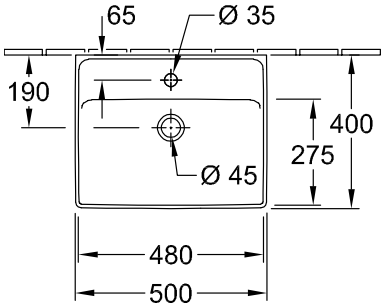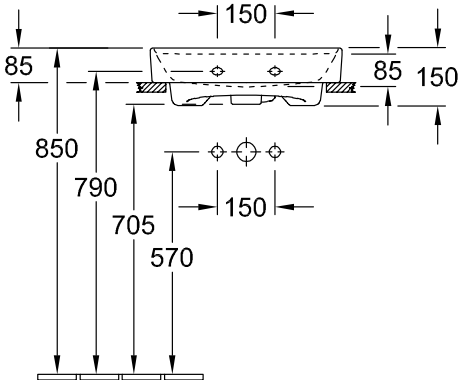
43345G01