ARCHITECTURA WASHBASIN RECTANGLE

PRODUCT INFORMATION

Article title	Villeroy & Boch Architectura Washbasin, 550 x 470 x 180 mm, White Alpin, without overflow
Article number	41885601
Assembly / Assembly type	wall-mounted
Scope of delivery	1 x washbasin
Depth in mm	470
Width in mm	550
Height in mm	180
Interior depth	125
Collection	Architectura
Tap fitting / Tap hole information	Please note: unclosable outlet valve must be used with models without overflow
Suitable for	3-hole mixer
Material	Sanitary ceramics
surface	glossy
Colour name	White Alpin
With overflow	No
Shape	Rectangle
Colour designation	White Alpin
Antibacterial surface (with AntiBac)	No
Easy surface cleaning (CeramicPlus)	No
Number of tap holes punched through	1
Number of tap holes pre-drilled	2
Number of bowls	1

TECHNICAL DRAWINGS

41885601

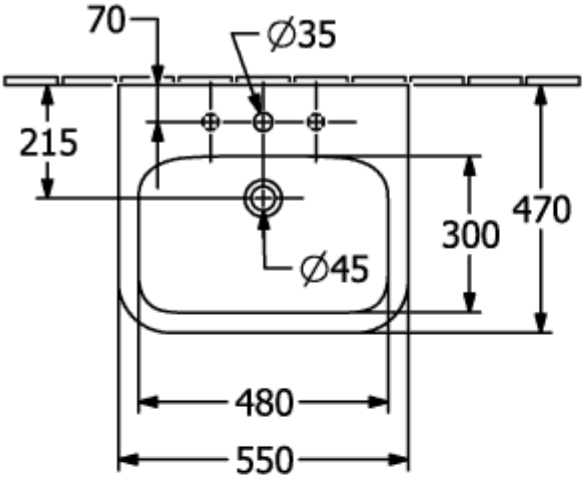

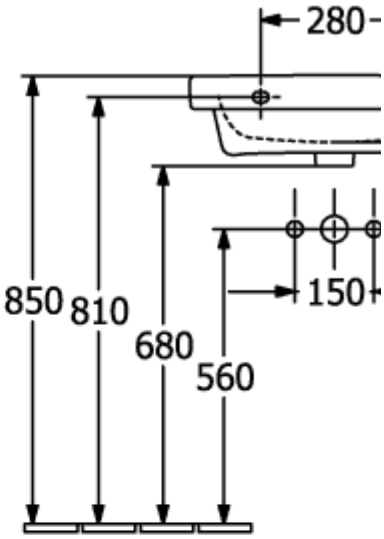

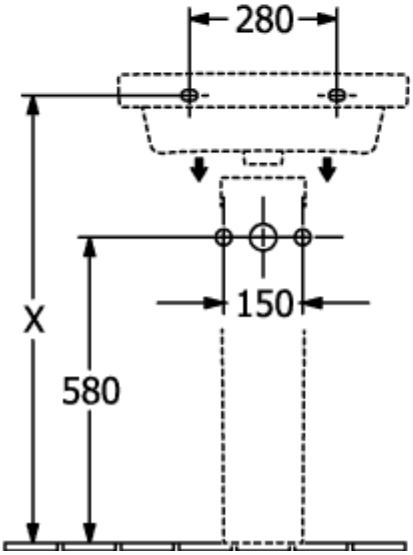

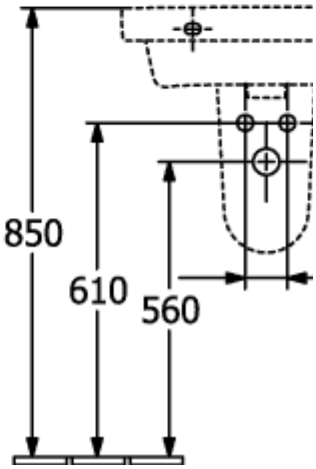

41885601

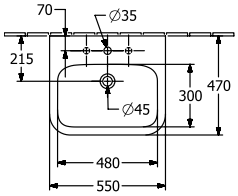
70
∅35
215
470
300
∅45
480
550

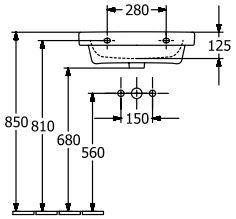
280
125
850
810
680
560
150

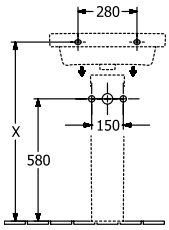
280
X
580
150

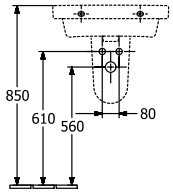
850
610
560
80